CLEARPATH-SD USER MANUAL

MODELS: SDSK, SDHP

NEMA 17 FRAME SIZE

VERSION 1.03 / NOVEMBER 19, 2026

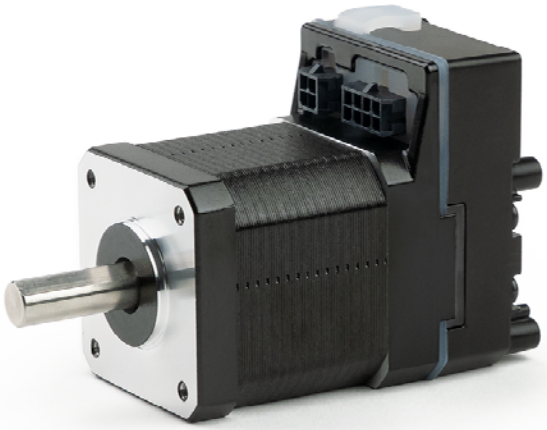

THIS PAGE INTENTIONALLY LEFT BLANK

TABLE OF CONTENTS

TABLE OF CONTENTS 3
TOP TIPS FOR CLEARPATH SD USERS 6
QUICK START GUIDE 7
Please Read This Important Warning 7
Before You Begin (Suggested Viewing Material) 7
ClearPath Quick Setup 8
Required Items 8
Install ClearPath MSP Software 8
Secure Your Motor 8
Power Up Your ClearPath Motor 9
Power-Up Procedure 11
Connect ClearPath to Your PC 12
Open ClearPath MSP (Motor Setup Program) 12
Spin Your Motor Under MSP Software Control 13
DAMAGE WARNING: ClearPath Inputs/Outputs 16
If You Experience a Motor Shutdown or Warning 17
Auto-Tuning 18
Before You Seek Technical Help 19
SAFETY WARNINGS 20
Personal Safety Warnings 20
CE Compliance Warnings 20
General Disclaimer 21
INTRODUCTION 22
What is a ClearPath Motor? 22
Parts of a ClearPath Motor 23
Overview: Configuring a ClearPath 24
Overview: ClearPath I/O 25
POWERING CLEARPATH-SD 26
Introduction 26
DC Bus Motor Power Supply (12-75VDC) 26
Logic Power Supply (12-75VDC) 26
Before Powering a ClearPath 26
DC Bus Supply: Teknic IPC-3 and IPC-5 75VDC 27
Power Distribution Boards 28
POWER4-HUB-S 28
POWER4-HUB-S System Diagram (Two Power Supplies) 29
POWER4-HUB-S Expanded System Diagram 29
POWER4-HUB-S: Things to Know 30
POWER4-STRIP-S (One Power Supply) 31
POWER4-STRIP-S: Things to Know 31
Other Power Supply Topics 32
Underpowered DC Bus Power Supplies 32
Switching Supplies 32
Compliance Notes 33
Power Supply Switching and Fusing 33
How Do I Pick the Right Power Supply for My Machine? 33

INPUTS AND OUTPUTS 34
ClearPath Inputs 35
Input Current Draw 35
How Inductive Loads Can Damage ClearPath I/O 36
How to Protect Your Motor From Inductive Kickback ... 36
The Enable Input 37
Inputs A and B: The Control Inputs 37
Input Wiring 38
ClearPath Output (HLFB) 39
HLFB Output Wiring Examples 40
HLFB Modes: Part 1 44
HLFB Modes: Part 2 46
USER SOFTWARE (CLEARPATH MSP) 48
Section Overview 48
MSP Minimum System Requirements 48
Installing MSP 48
Communicating With ClearPath Via MSP 48
Items Required for Communication Setup 49
First-Time Communication Setup 49
Tour of ClearPath MSP Software 50
Main UI Overview 50
Mode Controls 50
Torque Limit Setup 51
Dashboard 56
MSP Menus 57
MSP Software Scope 69
Overview 69
Scope Features 69
Scope User Interface & Controls 70
CLEARPATH-SD OPERATIONAL MODES 77
Step & Direction 77
Mode Description 77
I/O Functions 77
Mode Controls 78
Step & Direction Pulse Timing Information 79
Step Input Timing Problems 80
Quadrature Input 82
Mode Description 82
I/O Functions 82
Mode Controls 83
APPENDIX A: TROUBLESHOOTING 84
LED Blink Codes 84
APPENDIX B: MECHANICAL REFERENCE 88
Dimensioned Drawings 88
Motor 88
Power Distribution Boards 88
Motor Mounting Considerations 89
Connecting ClearPath to a Mechanical System 89
Motor Connection: General Tips and Guidelines 90

Notes on Coupling Selection 91
Installing Pulleys and pinions 92
About End-of-Travel Stops 93
Hard Blocks 93
Elastomeric (rubber) Stops 93
Pneumatic (dashpots) 93
End Stops and Hard Stop Homing 93
Fan Mounting 94
APPENDIX C: CONNECTOR AND CABLE REFERENCE 95
Mating Connectors: ClearPath-SD, NEMA 17 Model 95
Mating Connectors: Power Distribution Boards 96
Cable Drawings 97
Power Cables 97
Control Cables 97
APPENDIX D: SPECIFICATIONS 98
ClearPath-SD NEMA-17 Motor 98
POWER4-HUB-S 100
POWER4-STRIP-S 101
APPENDIX E: GROUNDING AND SHIELDING 102
Protective Earth (PE) Connection 102
Grounding and Shielding 102
Power Returns 103
APPENDIX F: CLEARPATH PART KEY 104
APPENDIX G: MISCELLANEOUS TOPICS 105
Homing 105
Introduction 105
Terms Used In This Section 106
Homing Settings 107
Typical Homing Sequences 111
Precision Homing 113
MSP Motion Generator 115
Motion Generator Controls 115
Encoder and Input Resolution 117
Introduction 117
Terms used in this section 117
Native Resolution 117
Positioning Resolution 118
Input Resolution Setting in MSP 118
RAS (Vibration and Resonance Suppression) 120
RAS (Regressive Auto-Spline) 120
Make a "no-crimp" Logic Power Supply Cable for POWER4-HUB-S 123
Other Product Notes 123
ClearPath EMC Instructions 123

TOP TIPS FOR CLEARPATH SD USERS

These tips apply to NEMA 17 ClearPath-SD motors.



- ✓ **Buzzing sound during power-up?** The motor will produce a brief buzzing sound while it initializes. This is normal and expected.
- ✓ **Motor Killer!** Never reverse DC bus voltage polarity (positive vs. negative) to your ClearPath motor. Doing so will irreparably damage the motor.
- ✓ **Protect Your ClearPath I/O!** Brakes, solenoids, contactors (any coil-actuated device) that are wired in parallel with your ClearPath inputs can destroy them via inductive kickback. Diodes save [motor] lives.
- ✓ **Cover the USB connector when not in use.** This helps prevent dust and debris from entering the connector, which can cause communication problems.
- ✓ **Yellow Blink Code?** This indicates a shutdown of some type has occurred. 1) Look up motor blink codes in the user manual (see Appendix A). 2) Connect to your motor's USB port to view shutdown messages using the MSP software.
- ✓ **Run Auto-Tune with the full mechanical load attached.** For best performance, run Auto-Tune with the ClearPath motor coupled to the machine exactly as it will operate in service. The factory-default tuning is configured for unloaded operation.
- ✓ **Prevent Water Ingress.** This family of motors is meant for use in dry environments only. Do not expose to water.
- ✓ **Step Timing Shutdowns?** Install resistors on the step and direction outputs of controllers with transistor outputs. More…

QUICK START GUIDE

This section will help you get your ClearPath-SD motor up and running.

ITEMS COVERED IN THIS SECTION

- How to download and install ClearPath MSP (setup and configuration software)
- How to power up your ClearPath motor
- How to connect your ClearPath to a PC and establish communication
- How to spin your unloaded[1] ClearPath motor under MSP software control

PLEASE READ THIS IMPORTANT WARNING

Always use caution when working with motion control equipment. Even the smallest ClearPath motor can generate enough force to cause serious injury. Keep fingers, hair, loose clothing, jewelry, and other objects away from moving machinery.

ClearPath motors are powerful motion-control devices and can be dangerous if installed, operated, or handled improperly. Before operating a ClearPath motor, read and understand all applicable safety warnings and instructions in the ClearPath User Manual.

BEFORE YOU BEGIN (SUGGESTED VIEWING MATERIAL)

Check out the ClearPath overview video. This is a great way to learn about ClearPath motors (and Teknic as well). Note: There's a great ClearPath demonstration at time reference 3:50.

Try watching a few ClearPath operational mode videos. There is a separate short video for most ClearPath operational modes (This motor model only supports operating mode #11, Step and Direction). Each video includes an overview of the operating mode, a brief discussion of software controls and settings, and a demonstration featuring a real mechanical system.

ClearPath Video Links
https://www.teknic.com/watch-video/
https://www.youtube.com/channel/UC4Q91tGO80QMSHyy1SoHrtg

[1] Unloaded means *with nothing attached to the motor shaft*. ClearPath comes factory preconfigured for unloaded operation. **ClearPath must be tuned** whenever it is connected to a new type of mechanical system.

CLEARPATH QUICK SETUP

REQUIRED ITEMS

- NEMA-17 ClearPath-SD motor
- DC Bus Power Supply (with cables) 12-75 VDC
- Power distribution board (POWER4-HUB-S or POWER4-STRIP-S)
- Windows PC (Windows 10 or later)
- USB Cable (USB A-C or USB C-C, high speed data rated)
- Quick-grip clamp, vise, or similar

INSTALL CLEARPATH MSP SOFTWARE

MSP is a free download from Teknic's website. Click here for a direct link. To install MSP, save the zip file to your local computer, extract the .exe file, and run it.

SECURE YOUR MOTOR

Injury Warning: The motor may move suddenly during tuning and operation. To prevent injury or property damage, secure the motor to a stable surface before operation.

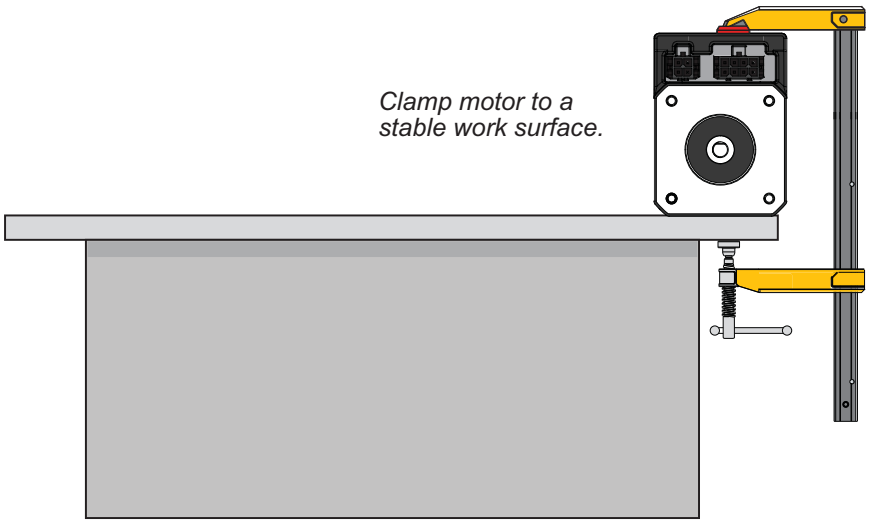

Clamp it!

POWER UP YOUR CLEARPATH MOTOR

THINGS YOU'LL NEED

- DC Bus Motor Power Supply: Teknic IPC-5 (75 VDC) or equivalent.
- Power Distribution Board: POWER4-HUB-S or POWER4-STRIP-S. The POWER4-HUB-S requires a separate 12–75 VDC Logic Power Supply; the POWER4-STRIP-S does not support a separate Logic Power Supply.
- Cables: As shown below.

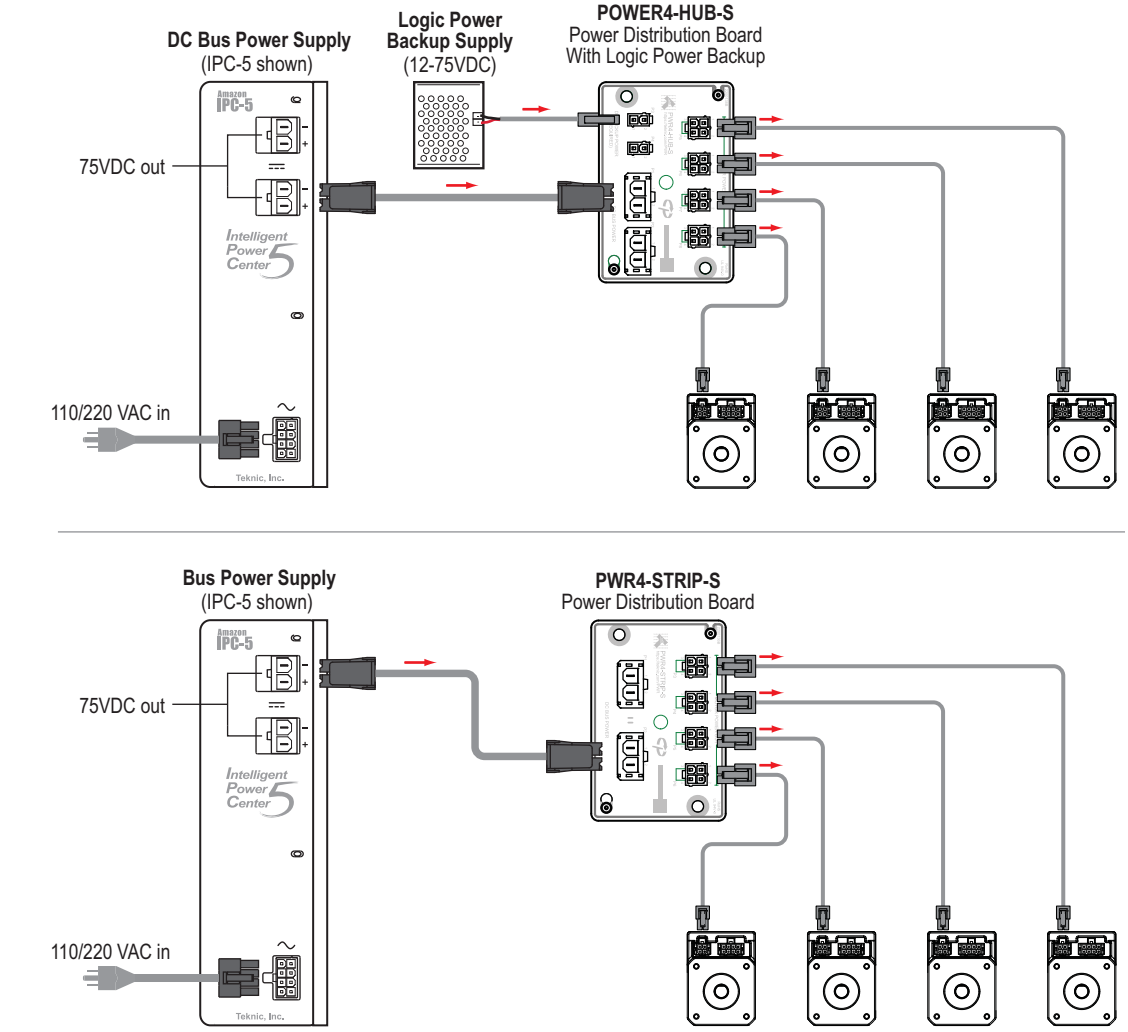

ClearPath Power Connections using a POWER4-HUB-S or POWER4-STRIP-S

TEST DC POWER POLARITY

IMPORTANT: Reversing DC Bus Power polarity *will* permanently damage your ClearPath motor.

Important Notes

- If using unmodified Teknic cables, you can safely skip this test.
- **Do not force or jam DMM probes into the connector.** Use smaller probe tips or find a safe alternative way to verify that polarity is correct.

1. Start with the power connector disconnected from your ClearPath motor.
2. Power-up your DC Bus Motor Power Supply.
3. **Measure DC Bus Motor Power Supply voltage and polarity.** With a multimeter, measure the DC voltage from Bus Motor Power+ to Bus Motor Power -.
4. Power-up your Logic Supply.
5. **Measure Logic Supply voltage and polarity.** With a DMM, carefully measure the Logic Supply voltage between Logic Power+ and Logic Power-.

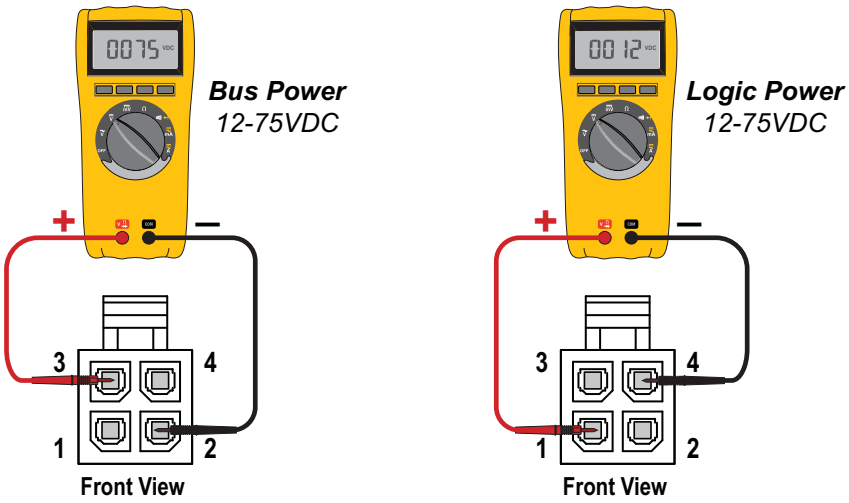

Terminal Assignment Table			
Position	**Wire Size**	**Color**	**Signal**
1	24 AWG	ORN	Logic Power +
2	18 AWG	BLK	Bus Motor Power -
3	18 AWG	RED	Bus Motor Power +
4	24 AWG	BLU	Logic Power -

Check power polarity with a DMM

Note: See Appendix C for links to cable drawings and pinouts.

POWER-UP PROCEDURE

1. **IMPORTANT:** Start with power supplies turned off. See note below.
2. Connect cables as shown earlier in this section.
3. Turn on power supply (or supplies if using a separate Logic Power Supply).

IMPORTANT: Remove AC line power to your DC Bus Power Supply whenever connecting or disconnecting a power cable to your motor. Removing power will prevent electrical arcing from damaging the motor power pins and connector terminals.

CONNECT CLEARPATH TO YOUR PC

1. Connect a high-quality USB cable (A to C or C to C) to the motor's USB-C communication port. See figure below.
2. Connect the other end of the USB cable to your PC.
3. For a first-time connection, wait a few seconds for the ClearPath driver software to install automatically before proceeding.

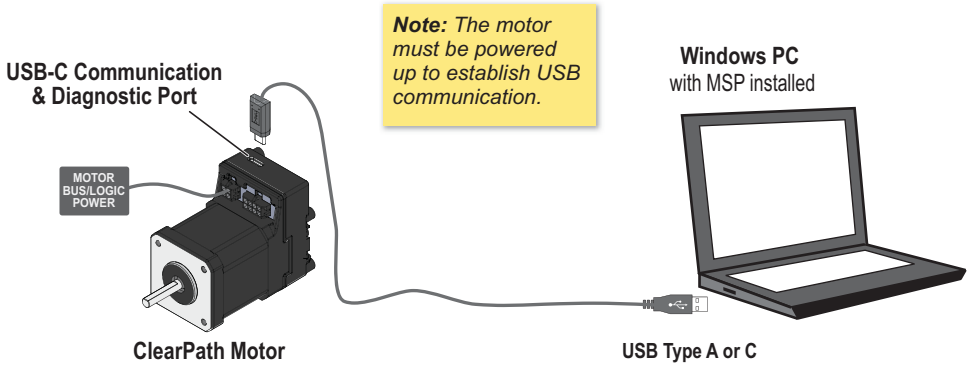

Connect ClearPath to your PC

USB Communication Notes

For best performance use USB-IF certified cables such as Teknic's CPM-CABLE-USB-118AC. Avoid using USB cables of unknown origin (i.e. one found in a junk drawer). Cables designed for *charging only* will not work with this product.

You may connect your ClearPath motor to a PC at any time to use MSP configuration and diagnostic software tools, but maintaining a permanent USB connection is strongly discouraged.

OPEN CLEARPATH MSP (MOTOR SETUP PROGRAM)

After you open MSP, ClearPath will attempt to establish communication with your PC. If all is well, you will briefly see a window like the one below.

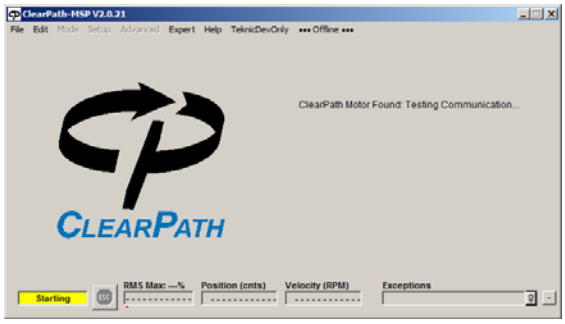

Open MSP motor setup and configuration software

SPIN YOUR MOTOR UNDER MSP SOFTWARE CONTROL

The best way to learn about your ClearPath motor is to try it under software control. MSP includes simple software controls that emulate hardware inputs and outputs, so you can move your motor around without connecting I/O devices.

Note: ClearPath Soft Controls are intended for testing, development, and training, not as a machine control system.

ClearPath SD models have one mode: *Step and Direction*. We'll open that mode and get the motor spinning using MSP software controls.

1. Open MSP software.
2. Establish USB communication to your motor.
3. The "Tuning" dialog will appear. For now, select the bottom option (run with no load) and hit "Next".

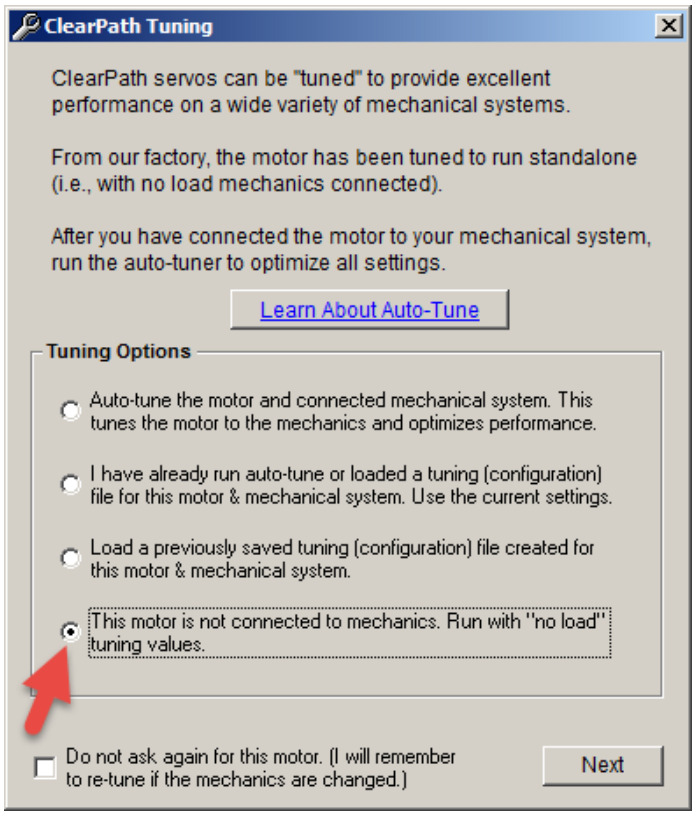

4. In MSP, Select *Mode>Step and Direction*. The mode controls window will open.
5. Set Units to RPM as shown in the figure below. This just tells MSP in what units to display distance, velocity, and acceleration.
6. Disable homing (see figure below).

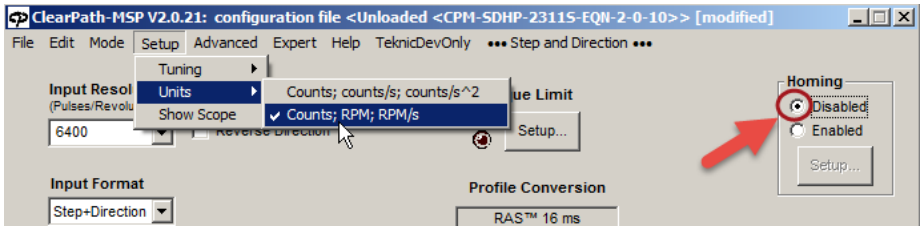

7. Click the Override Inputs checkbox. This turns on the software controls. You may notice that the other Soft Controls are no longer grayed out.

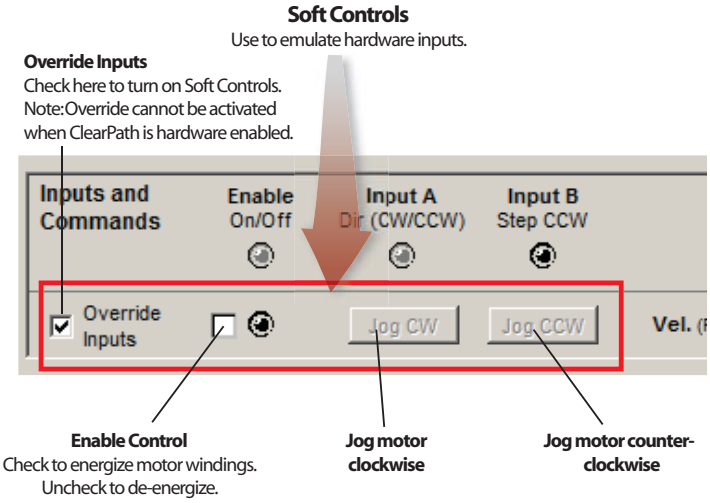

Check "Override Inputs" to turn on Soft Controls

8. **Safety check!** Before proceeding, make sure that the motor is securely clamped down and the shaft is safely positioned away from fingers, clothing, hair, cables, etc.

9. Check the Enable checkbox. **Caution: the motor is now energized and capable of motion!**

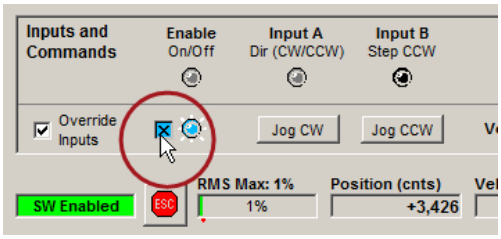

Enable using Soft Controls

10. **Make some moves.** With the motor enabled, click the jog CW/CCW (clockwise/counterclockwise) buttons. Change motor velocity and acceleration using the fields shown in the figure below.

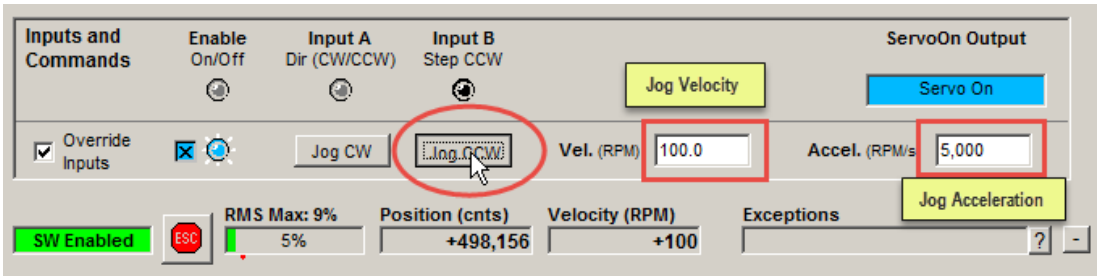

Click and hold jog buttons to spin your ClearPath-SD motor

DAMAGE WARNING: CLEARPATH INPUTS/OUTPUTS

Never connect "unprotected" inductive loads across your ClearPath motor's input or output circuits. If you have inductive devices such as relay coils, solenoids, contactor coils, power-off brakes, (any device that works by intermittently powering and unpowering a large inductor/coil) connected across your ClearPath inputs or outputs, you will damage or destroy the ClearPath I/O circuits. Damage of this nature manifests as inputs or outputs not working, and can happen immediately or over time.

Always install a protection diode across any coil wired across your ClearPath inputs and output to prevent high voltage discharge spikes from permanently damaging the motor.

Please read the section *How Inductive Loads Can Damage ClearPath I/O* for more information on how to protect your ClearPath motor from this type of damage.

IF YOU EXPERIENCE A MOTOR SHUTDOWN OR WARNING

Many, but not all, shutdowns are caused by non-motor issues such as an undersized power supply, mechanical problems, and/or inappropriate move settings. If your ClearPath experiences a shutdown, it is *reporting* a problem, but it is not necessarily causing the problem.

- If you exceed your power supply's capability, ClearPath will tell you. You'll see warnings or shutdowns in the Exceptions field at lower right of the UI. (This does not mean that the motor is broken.) Try lowering the acceleration and/or velocity of your moves until the warning goes away.
- If a small triangular warning icon (figure below) appears anywhere in the Mode Controls section, hover your cursor over the icon to display its tooltip message.

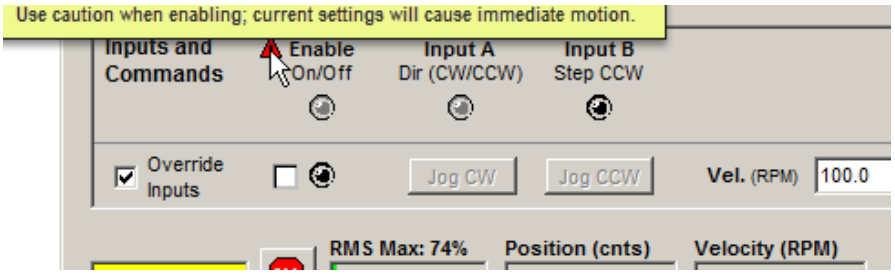

Hover cursor over "warning triangle" to read its message

- You can clear most exceptions by clicking the Clear Exceptions button, but be aware that if the underlying problem isn't fixed, shutdowns may continue to occur.
- If the motor Status LEDs show **RED** at any time, your ClearPath motor has identified an internal hardware problem and may need to be returned for repair or replacement. Please contact Teknic if this happens.

AUTO-TUNING

Tuning is required *whenever you bolt your ClearPath motor to a new or different mechanical system*. The Auto-Tune feature greatly simplifies this process.

BEFORE YOU BEGIN THE AUTO-TUNE PROCESS:

- Disable your motor.
- Recommended: Turn off your PC's sleep mode. If your PC goes into standby, sleep, or hibernation mode during Auto-Tune, the process will fail.
- Tighten all couplings, fasteners, pinions, and belts to the manufacturer's specifications.
- Make sure the axis and machine frame are fully intact.
- Don't try to tune a system on a flimsy table or casters.
- Use a power supply designed for use with motor drives such as Teknic's IPC-3 or IPC-5.
- Don't use a low power switching power supply.

STARTING THE AUTO-TUNER

In MSP, click **Setup>Auto-tune**.

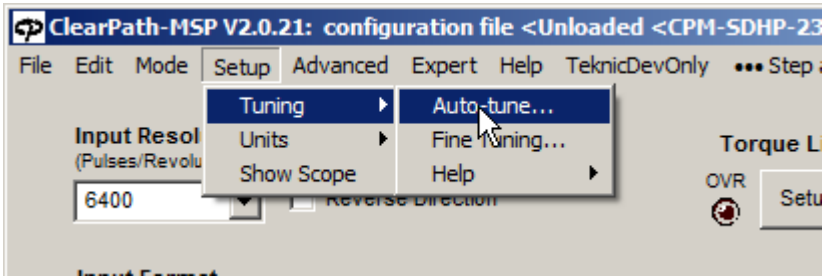

Start the Auto-Tuner

Important: The Auto-Tune application was carefully designed to walk users through the tuning process in a safe, step-by-step manner. Anyone engaged in Auto-Tuning must be able to read, understand, and follow all instructions presented.

DURING THE AUTO-TUNE PROCESS

- **Be careful.** Immobilize your motor with bolts or clamps. Keep your hands, hair and clothing away from the motor shaft and mechanical system.
- **Be patient.** Auto-Tune can take up to 30 minutes (5-15 minutes is more typical).
- **Expect noises.** You'll hear humming, buzzing, clicks and clacks, and different tones as Auto-Tune explores the limits of your mechanical system. This is normal.

BEFORE YOU SEEK TECHNICAL HELP

Issue: The status LED on the motor is not lit, and my ClearPath apparently has no power.

- Connect power cable to ClearPath.
- Plug in and turn on power supply.
- Verify wall outlet is powered and no circuit breakers are tripped.
- If you accidentally reversed DC power to your ClearPath motor, it is very likely damaged and must be returned to Teknic.

Issue: The status LED is working, but my ClearPath and PC are not communicating.

- Disconnect the USB cable from ClearPath and your PC, close MSP, restart MSP, and reconnect the USB cable.

Issue: Auto-Tune failed to complete.

- Check to see if more than one version of MSP is installed on your computer. Always uninstall previous versions of MSP before installing new versions.
- If your power supply is a switcher or an underpowered "bulk" linear supply with insufficient current and/or capacitance, and cannot tolerate regenerated energy, you may have problems running Auto-Tune. ClearPath motors can operate between 12-75 VDC, but they require adequate power to Auto-Tune.

Issue: My ClearPath is getting shutdowns.

- A shutdown does not automatically mean that your ClearPath is broken or defective.
- Shutdowns with yellow or green blink codes usually mean that ClearPath is reporting a problem, but it is unlikely to be the problem. Connect ClearPath to your PC running MSP and look in the "Exceptions" field to see what's being reported.
- Check the ClearPath User Manual (Appendix A) for blink code details, clues, and possible fixes.
- If you see a shutdown accompanied by a red flashing LED, you may need to return your ClearPath for repair or replacement. Check the Teknic website for repair/return information.

How do I restore my ClearPath motor to its factory default settings?

If you need to return ClearPath to its original state (i.e., configured exactly as it was when you received it), use File>Reset Config File To Factory Defaults. All parameters and settings will be over-written and ClearPath will be returned to its default factory configuration.

SAFETY WARNINGS

IMPORTANT: Read this manual before attempting to install, apply power to, or operate a ClearPath motor. Failure to understand and follow the safety information presented in this document could result in property damage, bodily injury or death.

PERSONAL SAFETY WARNINGS

- Do not wear loose clothing or unconfined long hair when using ClearPath motors. Remove ties, rings, watches and other jewelry before operating an unguarded motor.
- Do not operate a ClearPath motor if your alertness, cognitive function, or motor skills are impaired.
- Always handle, and carry a ClearPath motor by the housing (don't carry it by the shaft or cables).
- Always understand how to use a mode of operation and its associated controls before attempting to operate a ClearPath motor.
- Install and test all emergency stop devices and controls before using ClearPath.
- Before applying DC power, secure the ClearPath motor to a stable, solid work surface and install a finger-safe guard or barrier between the user and the motor shaft.
- Provide appropriate space around the ClearPath motor for ventilation and cable clearances.
- Do not allow cables or other loose items to drape over, or rest near the ClearPath motor shaft.
- Never place fingers, hands, or other body parts on or near a powered ClearPath motor.
- Thoroughly test all ClearPath applications at low speed to ensure the motor, controls, and safety equipment operate as expected.

CE COMPLIANCE WARNINGS

- Do not open device enclosure. There are no user serviceable parts inside this product.
- Follow all instructions and use the product only as directed.
- Safety of any system incorporating this equipment is the responsibility of the system designers and builders.
- The machine designers need to recognize and incorporate required warning symbols, guards and shields for ClearPath motors that are used in applications that can result in the external accessible parts of their machine exceeding a temperature of 65 Celsius. This is required as a method to

reduce burns. A tool shall be required to remove any guards and/or shields.

- ClearPath motors require that a path exist between the motor chassis and the Protective Earth (PE) connection of the machine to which it is affixed. (Note: The PE connection is often satisfied by simply bolting the motor to the machine; however it is the users responsibility to verify the PE connection.) If an external grounding wire is required, use the same or larger wire gauge as used between the DC power supply and ClearPath Motor.
- Any maintenance or repair guide created by the user shall state that power shall be removed before the Protective Earth ground conductor is disconnected. When reconnecting power, the Protective Earth ground conductor shall be the first wire reconnected. Main power may be reconnected only after the Safety Ground connection is secure.

GENERAL DISCLAIMER

The User is responsible for determining the suitability of products for their different applications. The User must ensure that Teknic's products are installed and utilized in accordance with all local, state, federal and private governing bodies and meet all applicable health and safety standards.

Teknic has made all reasonable efforts to accurately present the information in the published documentation and shall not be responsible for any incorrect information which may result from oversights. Due to continuous product improvements, the product specifications as stated in the documentation are subject to change at any time and without notice. The User is responsible for consulting a representative of Teknic for detailed information and to determine any changes of information in the published documentation.

If Teknic's products are used in an application that is safety critical, the User must provide appropriate safety testing of the products, adequate safety devices, guarding, warning notices and machine-specific training to protect the operator from injury.

INTRODUCTION

WHAT IS A CLEARPATH MOTOR?

ClearPath combines a precision brushless motor, encoder, servo drive, and motion controller in a compact, integrated package.

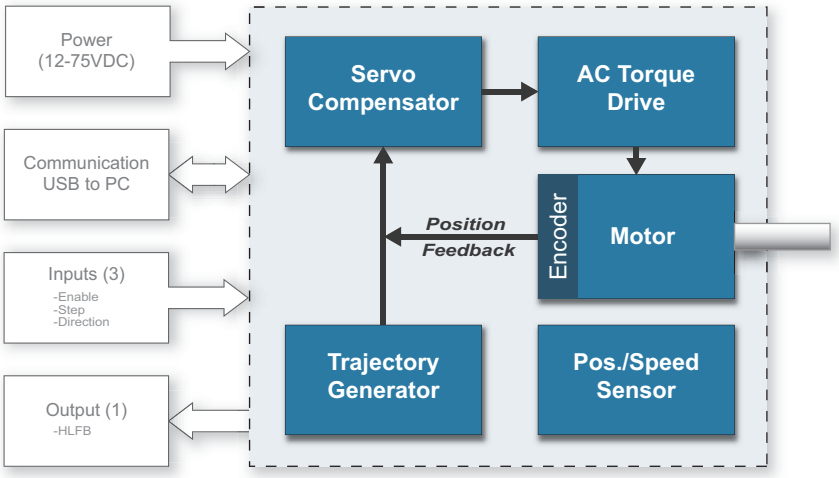

ClearPath functional blocks

ClearPath is a professional level, industrial grade product. The NEMA-17 ClearPath motor is designed with oversized bearings, a stainless-steel shaft, high-temperature windings, and powerful rare earth magnets.

A high-accuracy, ultra-low-latency optical encoder improves servo response compared with magnetic encoders. The integrated drive and motion control firmware use the same advanced control technology as Teknic's non-integrated servo products.

ClearPath setup is simple. Install the MSP software, connect the motor to your PC via USB, and configure and tune it. Once setup is complete, disconnect the PC and operate the motor using step and direction commands from any compatible controller.

ClearPath MSP software is written in plain English with plenty of tips and annotations. Use MSP to configure and tune the system. There's no steep learning curve with ClearPath.

Safety and self-protection features are standard. ClearPath will rapidly shut down if it becomes overloaded, overheated, detects a hard stop, or exceeds any of the safety or motion limits you specify.

Made in USA. Each ClearPath motor is built and tested in our New York manufacturing facility and backed by a three-year warranty.

PARTS OF A CLEARPATH MOTOR

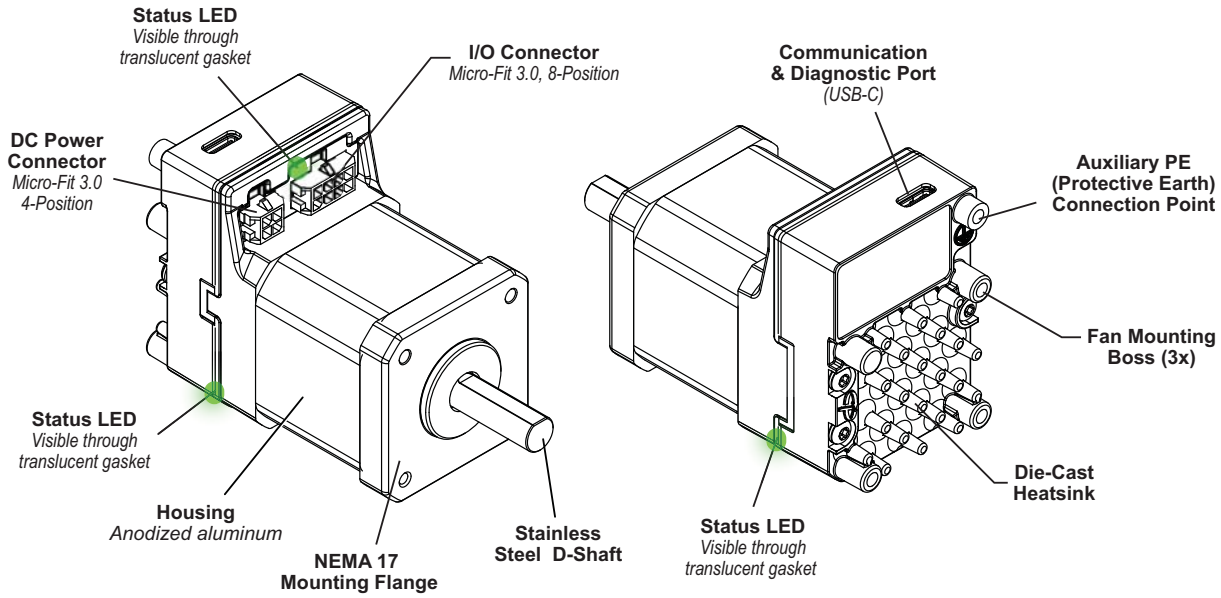

NEMA-17 ClearPath Motor

DC Power Connector - This Molex Micro-Fit 3.0 4-pin connector takes in DC Bus Motor Power (12-75VDC) and Logic Power (12-75 VDC).

I/O Connector - This Micro-Fit 3.0 dual-row, 8-position connector provides access to ClearPath's three inputs and one output.

Communication & Diagnostic Port - USB-C port used to connect ClearPath to a Windows PC running MSP. A USB connection is required to run Auto-Tune, configure the motor, and access MSP diagnostic tools, including the Soft Scope.

Status LEDs - (3 total) Indicate the operational status of the ClearPath motor. All Status LEDs mirror each other. See Appendix A for ClearPath Troubleshooting LED codes.

Auxiliary PE (Protective Earth) Connection Point - Provides an alternate Protective Earth connection. This is important if the motor mounting hardware does not provide a reliable PE bond. Connect a wire between this screw boss and a machine frame or chassis point that is bonded to PE. Use #6-32 thread forming screw with maximum penetration of 6.8 mm.

OVERVIEW: CONFIGURING A CLEARPATH

ClearPath must be configured and tuned before it can be used in a motion application. The main configuration steps are outlined below. Each of these points is discussed in greater detail later.

1. Install ClearPath user software (MSP) on a qualified Windows PC.
2. Connect your I/O devices to ClearPath (step and direction signals, switches, PLC, microcontroller, etc.).
3. Supply DC Bus Power and DC Logic Power to ClearPath.
4. Establish communication between ClearPath and MSP using the USB-C port.
5. Use ClearPath MSP software to:
    a. Select a mode of operation.
    b. Set motion parameters and options (acceleration, velocity, torque, safety settings, etc.).
    c. Tune the motor to the mechanical system.
6. Test and adjust settings as needed to optimize quality of motion and overall system performance.
7. Disconnect the computer and run your application. No computer is needed once setup is complete.

Save your settings. Save your ClearPath settings to a motor configuration (.mtr) file to compare different tuning parameters or quickly configure additional motors for the same machine design.

OVERVIEW: CLEARPATH I/O

ClearPath I/O provides a flexible high-level control interface for your ClearPath motor. There are no proprietary connectors, cables or sensors, so you decide which input devices are right for your ClearPath application.

Note: ClearPath inputs automatically change function based on mode of operation selected. See the Operation Mode section for input function.

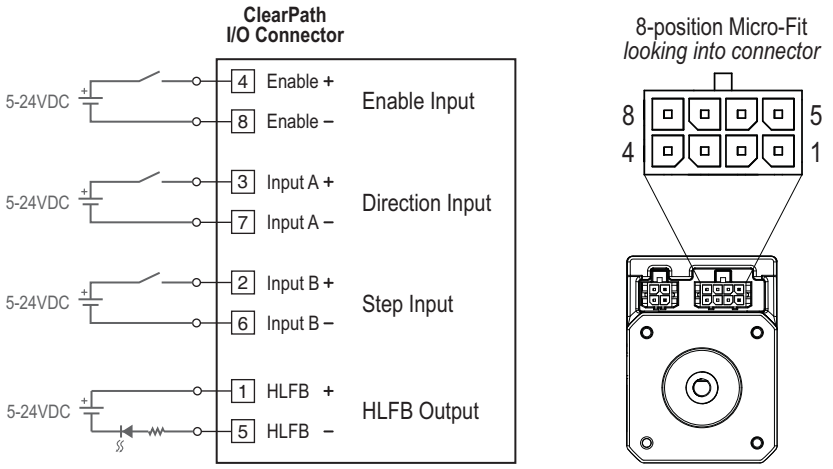

Simplified representation of ClearPath inputs and output

Enable Input. Asserting the Enable input (logical 1, high, 5–24VDC) energizes the motor coils. Deasserting Enable (logical 0, low state, 0 volts) removes power from the motor coils.

Inputs A and B. Connect the controller's Direction signal to Input A and its Step signal to Input B**.**

High-Level Feedback (HLFB). ClearPath's HLFB output can be set up to alert the user or control system to one of several conditions. HLFB can be configured to:

- Change state if a Shutdown occurs.
- Signal when ClearPath is running at your commanded velocity or torque.
- Signal the end of a move (based on user-defined settling requirements).
- Output a PWM signal whose duty cycle is proportional to motor torque.

POWERING CLEARPATH-SD

INTRODUCTION

ClearPath has separate inputs for **Bus Power** and **Logic Power**, each accepting 12–75 VDC. The motor can be powered from a single DC power supply or from two separate supplies, depending on the application requirements.

Note: Separate supplies are appropriate when higher Bus Power voltage is needed for motor performance, and lower Logic Power voltage is required for backup power.

Ground Note: The motor's Bus Power and Logic Power share a common internal ground reference.

DC BUS MOTOR POWER SUPPLY (12-75VDC)

The DC Bus Power Supply provides power to the ClearPath motor drive. The Teknic IPC-5 is a compatible Bus Power Supply.

LOGIC POWER SUPPLY (12-75VDC)

Users can opt to use a dedicated Logic Power Supply for applications that require uninterrupted power to the motor's processor and communication circuits.

The POWER4-HUB-S power distribution board requires a Logic Power Backup Supply in addition to the main DC Bus Motor Power Supply.

Important: Logic Power alone cannot power the motor windings for motion.

BEFORE POWERING A CLEARPATH

- Check for proper DC voltage polarity before connecting power to a ClearPath motor. Reversing DC power will permanently damage the motor. Follow this link for more information.
- Before connecting a power cable to a ClearPath motor, verify that the supply is turned off and discharged to prevent electrical arcing from damaging the connectors.

Note: When a ClearPath motor is powered up, a startup routine energizes the motor for a few milliseconds. During this startup routine a small amount of motion may occur at the motor shaft (<1˚ typical).

DC BUS SUPPLY: TEKNIC IPC-3 AND IPC-5 75VDC

Teknic manufactures the IPC-3 and IPC-5 75VDC power supplies designed specifically for powering motor drives. These supplies effectively manage peak current demand, regenerated energy, and include many built-in protective features.



Teknic IPC-3 Teknic IPC-5

Teknic 75VDC IPC power supplies

TEKNIC IPC-3

The IPC-3 open-frame power supply can power several NEMA-17 motors. The actual number of motors is highly dependent on the application requirements. Please visit the IPC product page for more information, features, and specifications.

TEKNIC IPC-5

The IPC-5 fully enclosed power supply can power several more NEMA-17 motors than the IPC-3. The actual number of motors is highly dependent on the application requirements. Please visit the IPC product page for more information, features, and specifications.

POWER DISTRIBUTION BOARDS

ClearPath motors in this family require both DC Bus Power and Logic Power. Teknic offers two power distribution boards—the **POWER4-HUB-S** and **POWER4-STRIP-S**—to simplify power connections and distribution to multiple motors.

POWER4-HUB-S - Distributes DC Bus Power and Logic Power (from a separate Logic Supply) to as many as four ClearPath motors. Both power inputs support 12–75 VDC. Users commonly use Logic Power of 12 VDC or 24 VDC, but can safely use any Logic Power voltage from 12-75VDC.

POWER4-STRIP-S - Distributes 12-75VDC to the DC motor drive *and* the logic power circuits. Up to four ClearPath motors can be connected per board. *The POWER4-STRIP-S does not support a separate Logic Power Supply*. It will send the same voltage to the bus *and* logic pins.

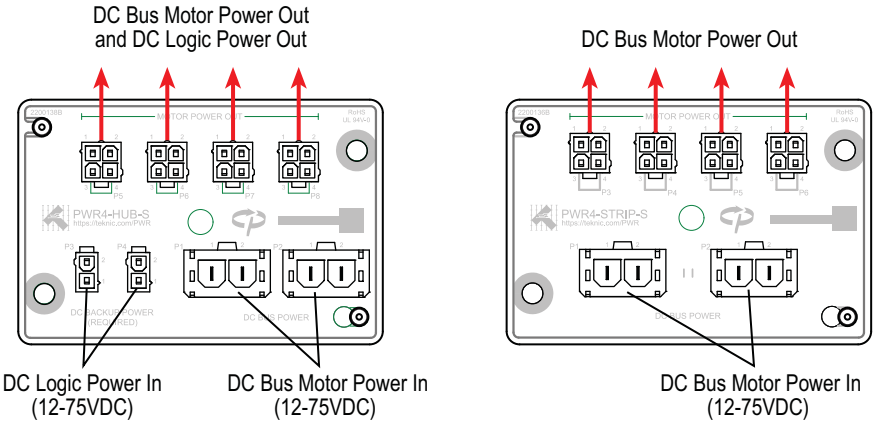

POWER4-HUB-S

The **POWER4-HUB-S**:

1. Distributes DC Bus Motor Power to up to four ClearPath motors.
2. Distributes Logic Power to the ClearPath motors via a separate supply. Logic Power will keep the motor's processor, encoder position, and associated electronics alive in the event that DC Bus Power drops out.

Note: Logic Power does not power the motor windings. Bus Power must be present to produce torque at the motor.

POWER4-HUB-S SYSTEM DIAGRAM (TWO POWER SUPPLIES)

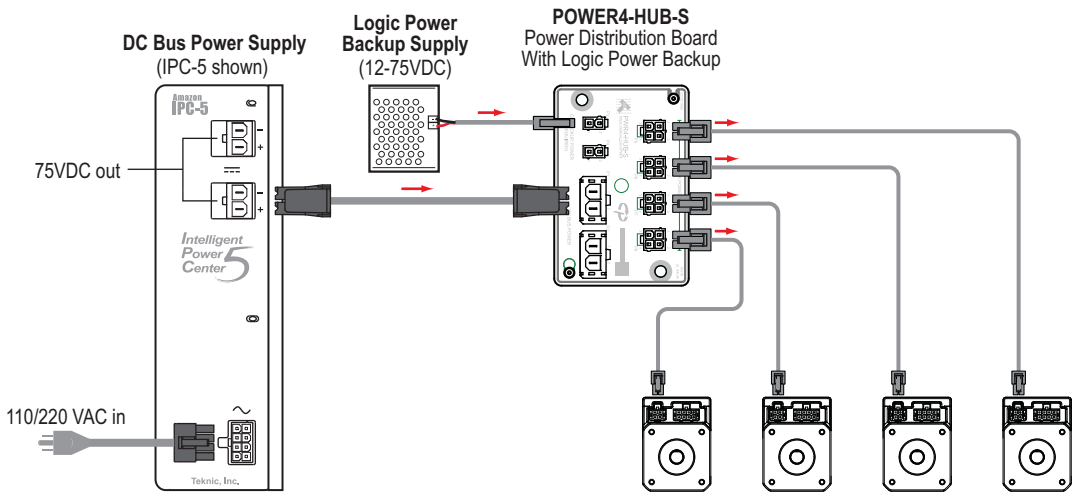

A POWER4-HUB-S in a ClearPath system

POWER4-HUB-S EXPANDED SYSTEM DIAGRAM

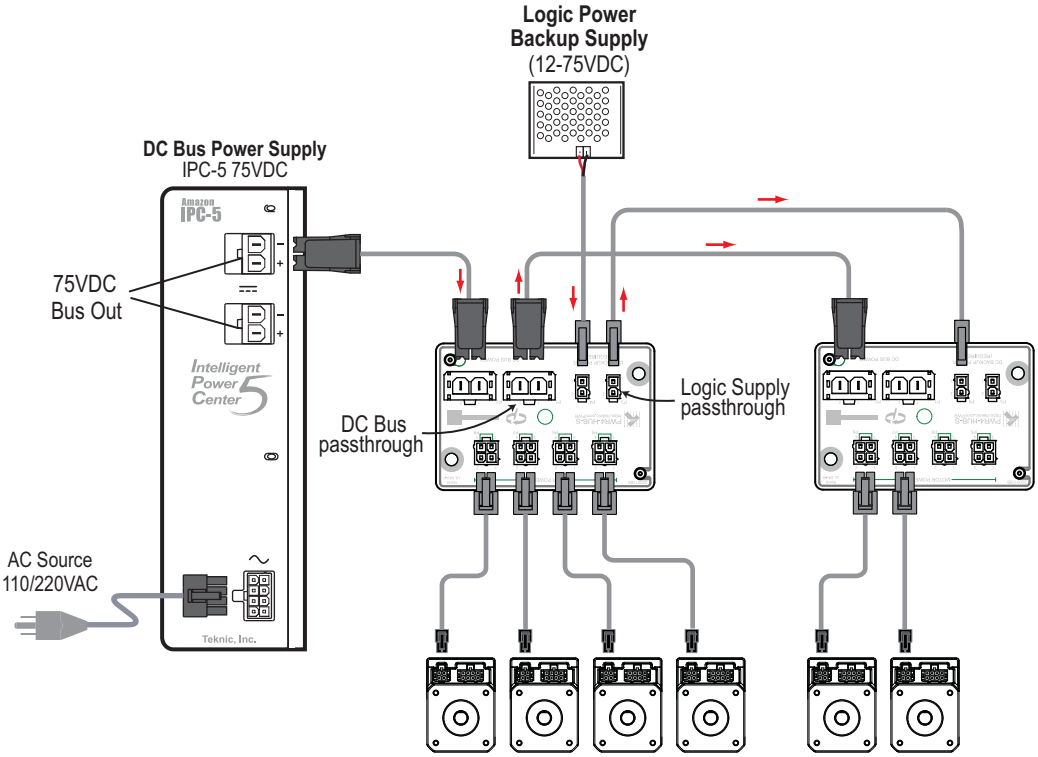

NOTE: The actual number of motors that can be powered by a single DC bus power supply is application and power supply dependent.

Two POWER4-HUB-S boards powering multiple ClearPath motors

POWER4-HUB-S: THINGS TO KNOW

- **IMPORTANT:** Do not connect two IPC-3 / IPC-5 power supplies to a single POWER4-HUB-S. These power supplies do not operate in parallel or series configurations.
- **Logic Power alone will not spin a motor.** However, Logic Power *will* keep the motor's processor, communication and related circuits powered.
- **Do not "hot swap" DC power connectors.** Turn off the DC Bus Power Supply before connecting a motor to the POWER4-HUB-S. *Connecting and disconnecting the motor from a live power supply will cause electrical arcing that will damage the connectors over time.*

IMPORTANT: The Power4-HUB-S board is not considered a shock hazard when the Logic Power Backup Supply is 42VDC or lower. Traces on the connector side of the PCBA carrying Logic Power can inadvertently come in contact with a user. Therefore, if Logic Power is above 42VDC, the Power4-HUB-S board must be installed behind a protective cover.

POWER4-STRIP-S (ONE POWER SUPPLY)

The **POWER4-STRIP-S** Distributes DC Bus Motor Power to up to four ClearPath motors. This board sends the same voltage to the motor's Bus Power inputs *and* Logic Power inputs.

Note: The POWER4-STRIP-S board does not take a separate Logic Power Supply.

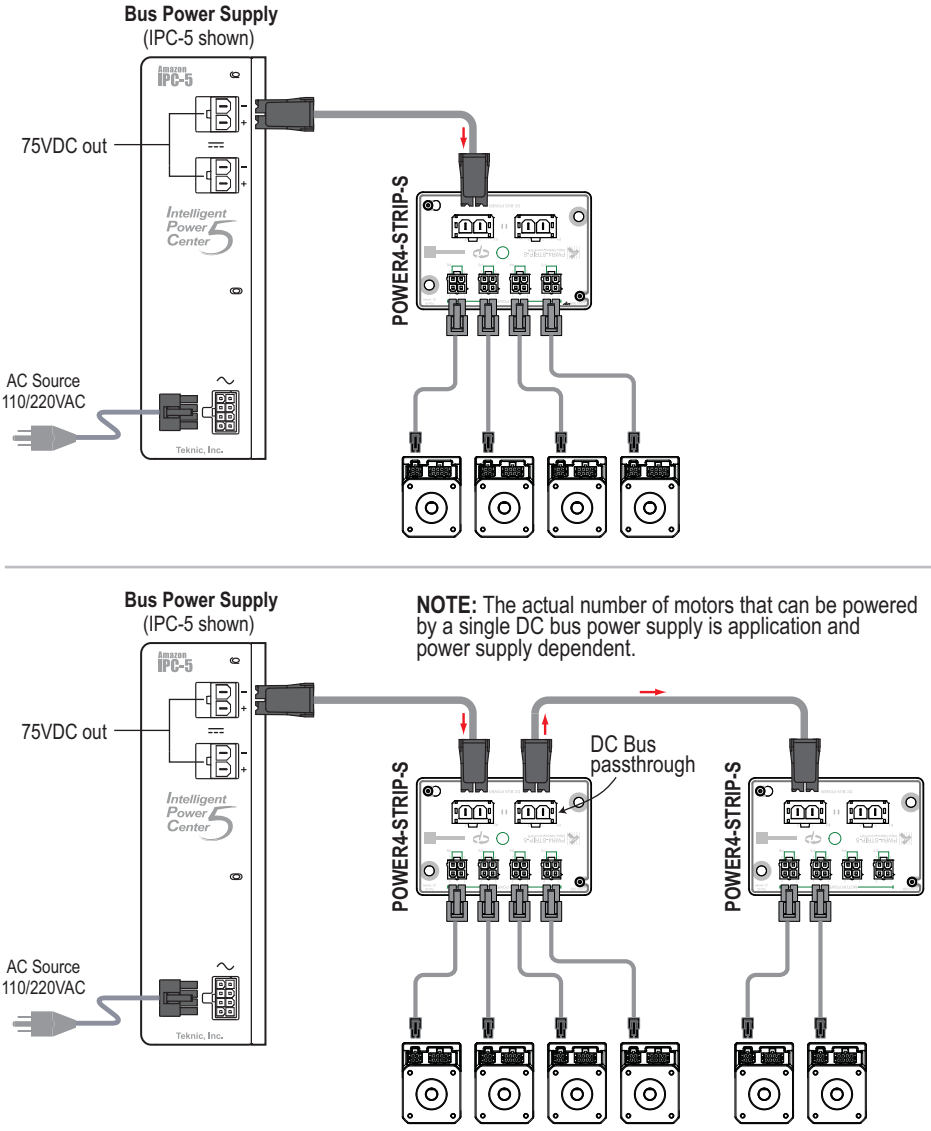

POWER4-STRIP-S boards powering ClearPath motors

POWER4-STRIP-S: THINGS TO KNOW

- **IMPORTANT:** Do not connect supplies is series or parallel.
- **Do not "hot swap" DC power connectors.** Turn off DC Bus Power Supply before connecting a motor to the POWER4-STRIP-S. Connecting and disconnecting the motor from a live power supply cause electrical arcing which can cause connector damage over time.

OTHER POWER SUPPLY TOPICS

UNDERPOWERED DC BUS POWER SUPPLIES

ClearPath motors can and do work with power supplies as low as 12 VDC, provided that the power supply has sufficient voltage, current, and capacitance to meet the application's torque and speed requirements. This assumes that the motor has been properly sized for the application.

IMPORTANT: An underpowered supply can result in ClearPath performance limitations and problems including the following:

- **ClearPath is unable to complete the auto-tuning process.** The ClearPath auto-tuning feature uses aggressive moves to test the limits of each mechanical system. A weak power supply (i.e. one that can't handle the peak current demands required by ClearPath) may "droop" the supply below ClearPath's minimum operating voltage, approximately 10 VDC. This can cause loss of communication and/or a safety shutdown. Needless to say, if Auto-Tune cannot run to completion, you may have an underpowered supply.
- **ClearPath completes the auto-tuning process but experiences certain warnings or shutdowns during programmed motion.** If Auto-Tune runs to completion, but you experience torque saturation, voltage saturation, or both during regular machine operation, you may be exceeding the supply's voltage and/or current capability.

If you have an underpowered DC bus supply

If you suspect your power supply is underpowered, one of these solutions may work for you:

- **Lower the commanded acceleration and/or velocity.** Sometimes lowering commanded acceleration and/or velocity can reduce the burden on a weaker power supply enough to eliminate shutdowns caused by "power starvation".
- **Upgrade to a more powerful supply.** Look for a supply with higher voltage, higher peak and continuous current ratings, and a large capacitor bank.

SWITCHING SUPPLIES

Switching power supplies can work with ClearPath motors, but are often not well suited to high power servo applications because they generally have the same peak and continuous-current ratings. This can lead the user to purchase a large but ultimately under-worked power supply just to meet peak current requirements.

In addition, most switching supplies are not designed to handle the regenerated energy (back-EMF) that a decelerating motor may return to the power supply. Without special provisions, regenerated energy may cause a switching supply to reset, power cycle, shut down, or even fail.

COMPLIANCE NOTES

- Any 3rd party (non-Teknic) power supply used with the POWER4-HUB-S or POWER4-STRIP-S, should be current limited or fused to 25A or less using a 25A, 300VDC (UL Listed) fuses.
- If UL compliance is a consideration, select a DC, UL Listed fuse.
- For those seeking a Class G fuse, the SC-25 from Eaton Cooper Bussmann, or OSLCO25 from Littelfuse is recommended. Fuse holders (also rated this way) include the HPS-FF and TCFH30N (from ECB/Littelfuse respectively).

POWER SUPPLY SWITCHING AND FUSING

POWER SUPPLY CONTROL SWITCH

The power supply for a ClearPath should not be switched on and off from the DC output side. Switching the DC output side, especially with inexpensive relays, will ultimately result in poor performance (drop outs) due to pitting, corrosion and contact welding. If a power switch is required, install it such that the supply is disconnected from the AC input side (see figure below).

POWER SUPPLY FUSING

If you require an external fuse on your power supply's DC output (to meet compliance standards for example) it should be installed in line with the positive leg of the DC output wiring Use a maximum 10A time delay fuse.

HOW DO I PICK THE RIGHT POWER SUPPLY FOR MY MACHINE?

Power supply requirements depend on several factors, including the number and type of motors, their torque and speed requirements, and operating conditions.

Even for a single axis, determining power requirements can be complex. Factors such as gearing, static and dynamic loads, reflected inertia, gravity, friction, acceleration, velocity, and machine throughput must be considered.

For multi-axis machines, additional factors include motor duty cycles, simultaneous axis motion, and regenerated energy.

In the end, Power supply selection often begins with an engineering estimate followed by testing under actual operating conditions. For applications with several motors operating at high speeds and torques, consider starting with a Teknic IPC-5 (75 VDC) power supply. Additional supplies can be added if testing indicates more power is needed. A single-axis machine moving a light load at relatively low speeds may require a smaller supply.

Regardless of the initial selection, test the machine under expected operating conditions to verify that the power supply is adequate.

INPUTS AND OUTPUTS

ClearPath inputs and output (I/O) allow the user to send and receive control signals from a ClearPath motor. There are a total of three digital inputs and one digital output accessible through the Micro-Fit 3.0 dual-row 8-position connector. Refer to Appendix C for I/O connector mating parts.

For links to cable drawings and pinouts, click here.

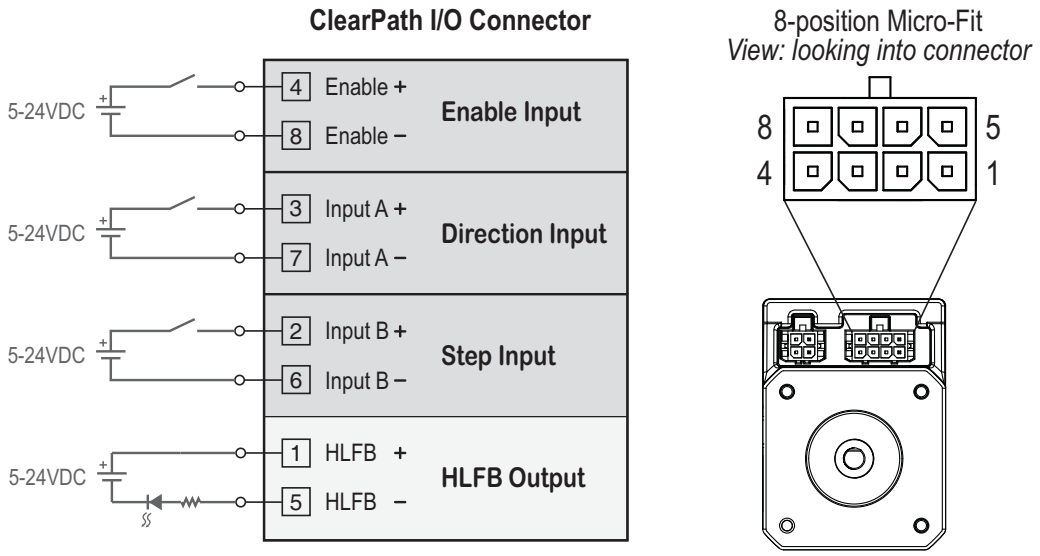

NEMA-17 ClearPath I/O

CLEARPATH INPUTS

Protecting Your Inputs and Outputs

To prevent motor I/O damage, never connect unprotected inductive loads (things like relay coils, solenoids, contactor coils, brake coils, etc.) such that they can discharge across ClearPath inputs or outputs. Doing so will blow out the ClearPath motor I/O circuits, causing permanent damage to the motor. See the section *How Inductive Loads Can Damage ClearPath I/O* for more information on preventing this kind of damage.

The three inputs, designated *Enable*, *Input A (Direction Input)*, and *Input B (Step Input)*, are designed for use with 5-24VDC logic levels and pulses from a wide variety of signal sources and devices including PLCs, microcontrollers, and mechanical switches.

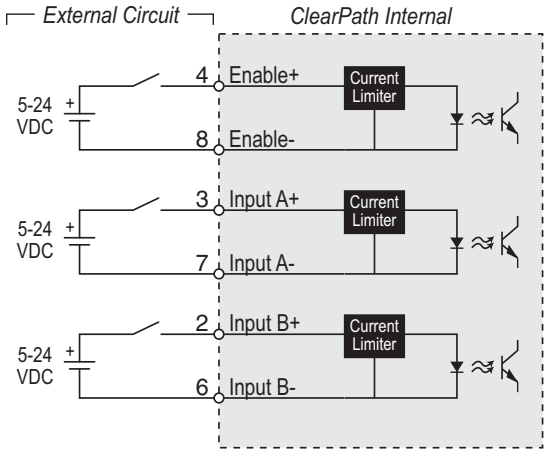

ClearPath Inputs shown with simple switches

INPUT CURRENT DRAW

See table and graph for minimum input current required for ClearPath input circuits over the range of acceptable input voltages.

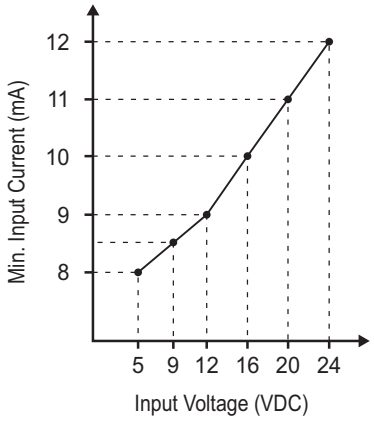

Voltage at ClearPath Input	Minimum Input Current Required*
5 VDC	8 mA
12 VDC	9 mA
24 VDC	12 mA

***To guarantee reliable input operation**, the supply used with your ClearPath inputs should be capable of sourcing *at least* the above stated current at the associated voltage for each input used.

Minimum input current for given input voltages

HOW INDUCTIVE LOADS CAN DAMAGE CLEARPATH I/O

Your ClearPath input and output circuits can be damaged if exposed to high voltage, inductive kickback. Inductive kickback is manifested as the short term, high voltage spikes produced by coil-actuated (inductive) devices when power is removed from the coil. Such devices include contactor coils, mechanical relay coils, solenoids, and power-off brakes.

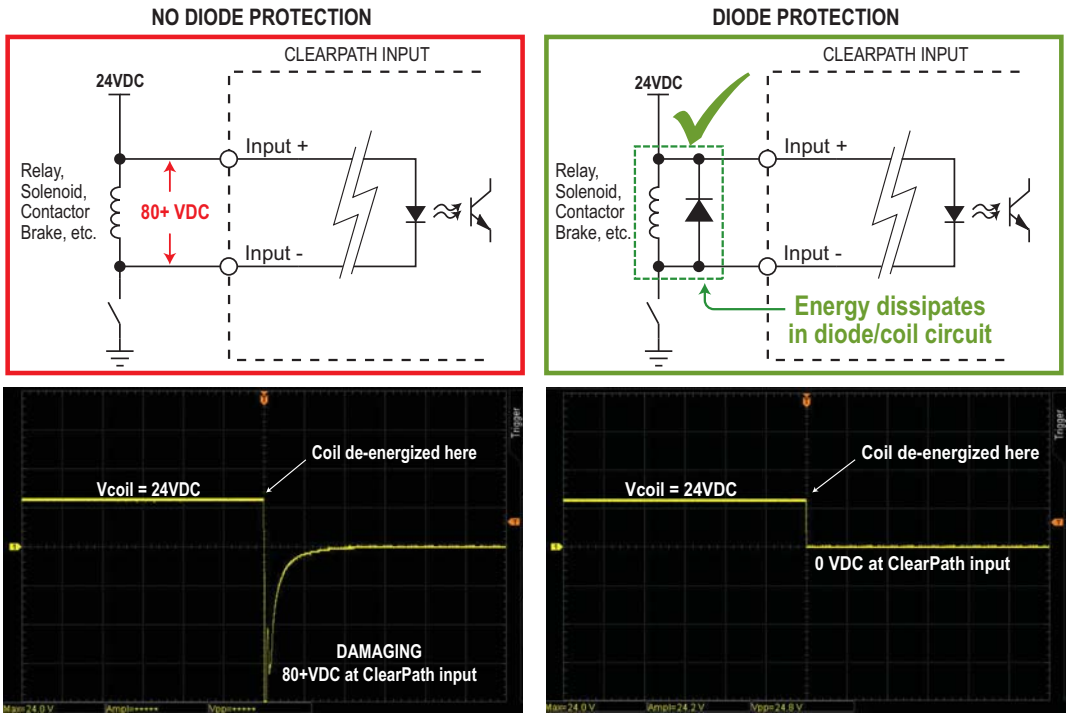

Use a flyback diode (right) to protect ClearPath inputs and outputs.

Damage Warning. When an inductive device is de-energized, its coil can generate voltage spikes reaching hundreds of volts and lasting tens of milliseconds. Without a flyback diode or other suitable protection, these spikes can damage ClearPath inputs connected in parallel with the coil. Although ClearPath I/O circuits are robust, they are not designed to withstand voltages hundreds of volts above their 4–28 VDC operating range.

HOW TO PROTECT YOUR MOTOR FROM INDUCTIVE KICKBACK

1) Avoid connecting inductive loads (coils) such that they can discharge across your ClearPath inputs or output. Use a separate power supply for inductive devices to isolate them from low voltage digital devices.

2) If you must connect a coil-actuated device across your ClearPath I/O, **add a protection diode in parallel with the coil in the polarity shown above.** *FYI: Protection diodes are referred to by various names including flyback diode, snubber diode, or catch diode.* We recommend using a common **1N4004** diode for most applications.

THE ENABLE INPUT

The **Enable Input** controls power to the motor coils. When a ClearPath is powered up and the Enable Input is asserted (i.e. 5–24VDC is present at the Enable Input) the motor windings energize and ClearPath is able to respond to control signals at Inputs A (Direction) and Input B (Step).

When Enable is deasserted power to the motor coils is removed and the motor cannot respond to user inputs.

Safety Note: The Enable Input is not designed for safety compliance use. Main power must be removed to ensure safety.

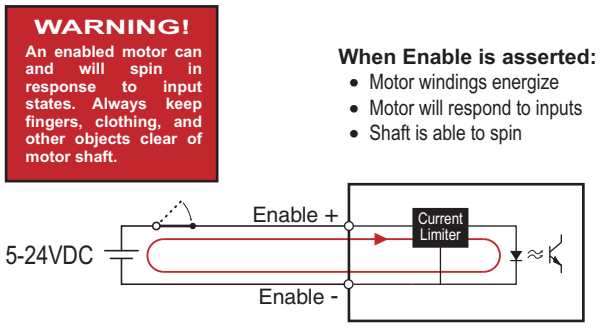

ClearPath Enable Input

INPUTS A AND B: THE CONTROL INPUTS

Inputs A and B are the main user control inputs. Step signals go to Input B, Direction signals go to Input A.

Engineer's Note: In all ClearPath motors, the input signals are electrically isolated from the DC power bus and motor output circuits, as well as from the motor case. This design feature ensures that control signals are not compromised due to induced currents from the motor, power supply, other sources of common mode noise, or ground loops.

INPUT WIRING

ClearPath inputs are compatible with standard digital outputs including open collector transistor, and driven outputs from PLCs, sensors, signal generators, microcontrollers and more.

Transistor Outputs

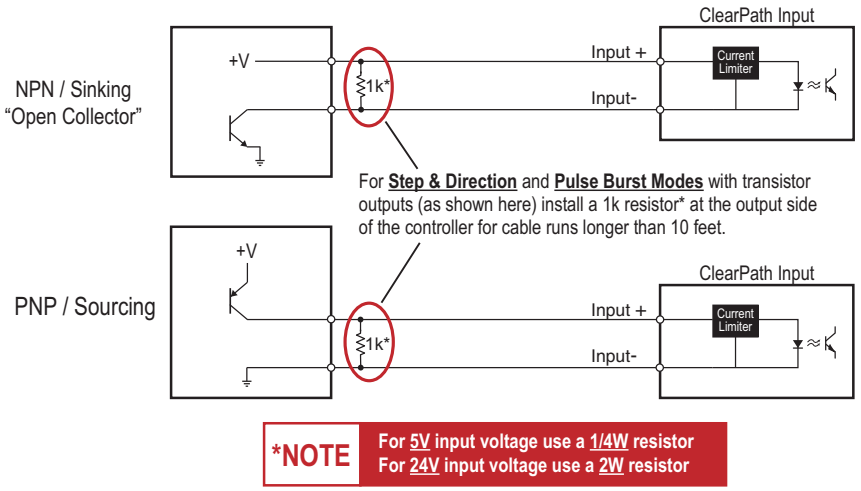

Driven Outputs, Single-Ended

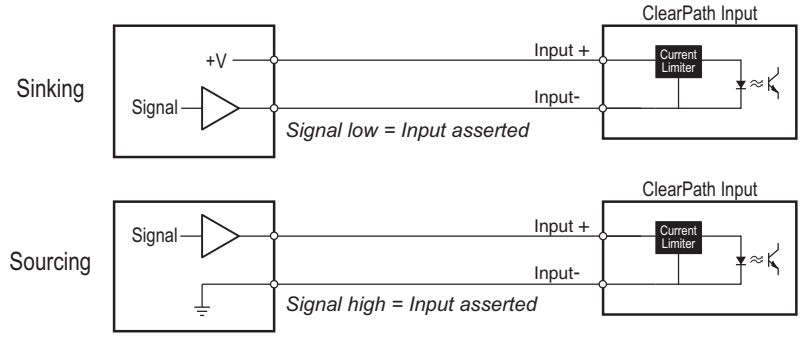

Interfacing digital outputs to ClearPath Inputs

Application Note: For additional information on selecting the proper resistor for your control input circuitry, see the Step and Direction Timing section of the user manual.

Differential Signals: 5V differential outputs are not directly compatible with ClearPath inputs because differential drivers' guaranteed output voltage swing is not guaranteed to meet the ClearPath's minimum input voltage requirement.

CLEARPATH OUTPUT (HLFB)

ClearPath has one, user settable, multi-purpose, digital output called the HLFB Output (HLFB stands for "High-Level Feedback"). The HLFB output conveys motor and motion-related feedback to your PLC, microprocessor, or other control device.

The HLFB configuration dialog is accessed from the Advanced menu as shown below. *Advanced>High-Level Feedback*.

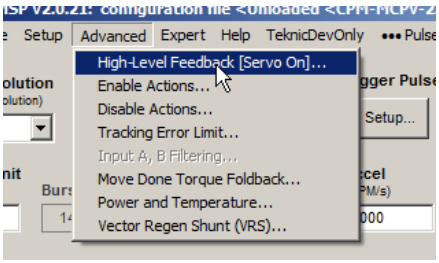

HLFB output can be used to signal:

- If the servo drive is enabled or in a shutdown (Servo On mode).
- When the commanded move is complete and settled to the user's specifications (ASG-Position mode).
- How well the motor is following your positioning or velocity commands (In Range).
- Motor position, via PPR output (Pulses Per Revolution).
- Motor torque, via PWM output (Torque Output mode).

Note: The HLFB circuit is not internally powered; it requires an external 5–24VDC power supply capable of sourcing/sinking at least 1mA, non-inductive. In typical HLFB applications, power is supplied by the PLC, control board, or an external supply. See Appendix D for complete HLFB specifications.

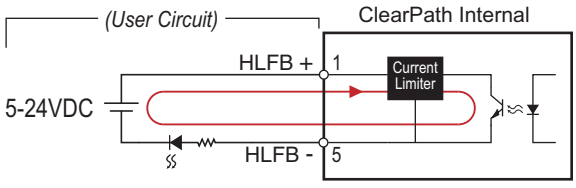

High-Level Feedback circuit

HLFB OUTPUT WIRING EXAMPLES

Any external circuit or device to be connected to the ClearPath HLFB output should conform to the guidelines below. Proper circuit design/selection greatly reduces the probability of electrically damaging the output, particularly in the event of a common production mistake such as an accidental short or reversed wiring.

HLFB AS A "SINKING" OUTPUT

The HLFB output can be configured as a sinking output, as shown below. This configuration provides a high degree of protection against accidental shorts to the machine chassis. Such a short would simply cause the output to appear continuously ON.

Note: This assumes the DC power supply return is connected to chassis ground at a single point in the machine.

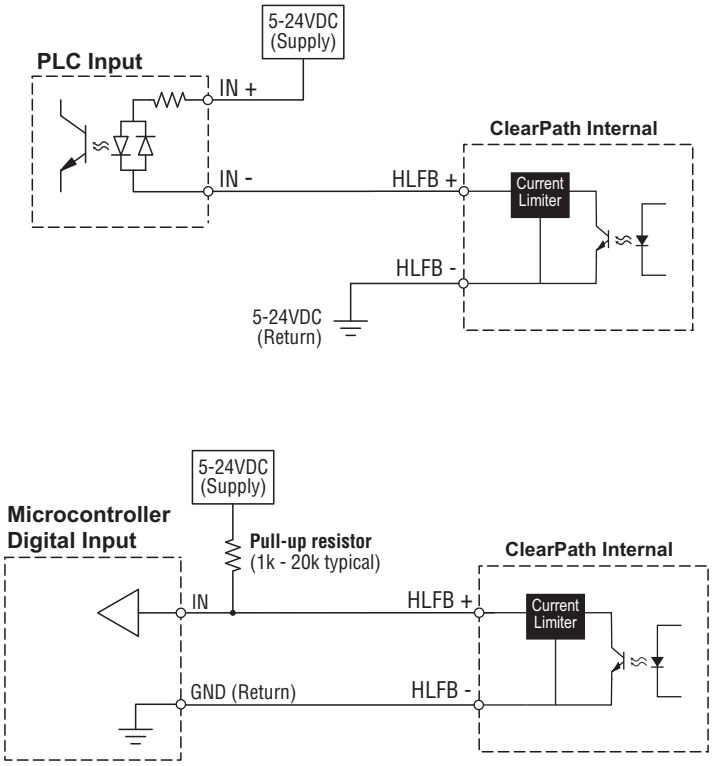

HLFB as a sinking output

HLFB AS A "SOURCING" OUTPUT

The HLFB output can be used as a sourcing switch as shown below. When using a sourcing topology, place a fuse in series with the DC supply's positive output (prior to connection to the HLFB+ pin of the ClearPath). ***Use a fast acting fuse rated for 100mA max.***

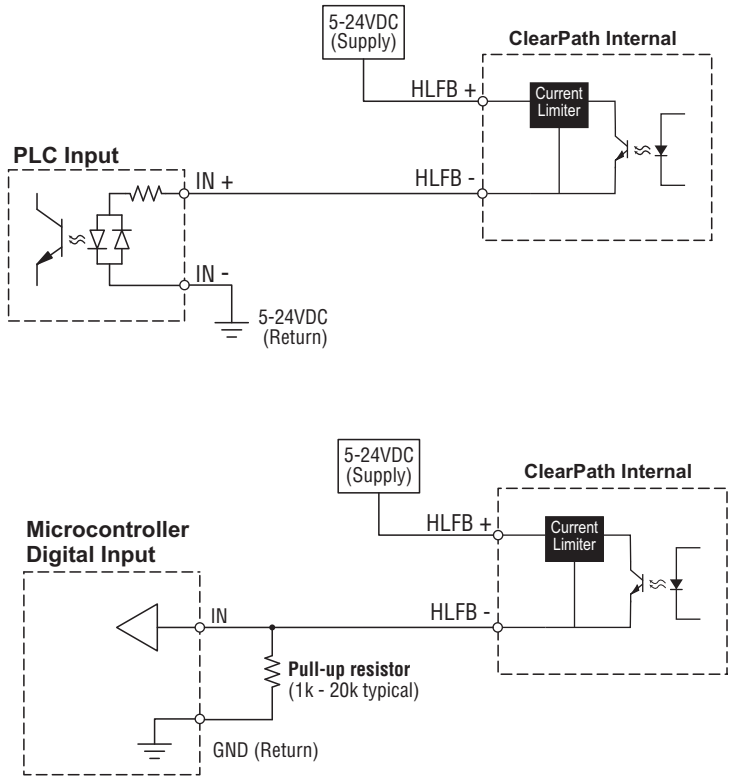

HLFB as a sourcing output

Current Limiting the HLFB Output

Whether you use sourcing or sinking topology, current supplied to the HLFB circuit from an external device should be limited to 30mA maximum. Although ClearPath includes built-in current limiting, a series connected, current limiting resistor may still be necessary to protect the HLFB Output's internal circuitry. A series resistor of 2000Ω @ 24VDC, 1100Ω @ 12VDC, 500Ω @ 5VDC can help prevent an overloaded or blown circuit.

Note: Any circuit or external device that you intend to connect to the HLFB output may already be appropriately current limited. Consult the device's user manual for its output current rating.

Tips on microcontroller inputs

- Check your microcontroller documentation to see if the inputs already have internal pull-up resistors before adding an external pull-up. If a pull-up/pull-down is too large >10,000 Ω, an additional lower value resistor may be required.

- Most Arduinos let you "turn on" or "turn off" internal pull-up resistors with a simple line of code. See link below for more information on Arduino inputs.
- To learn more about pull up resistors and digital circuits, search on: "***pull up resistor for digital input***".

Arduino on the Web

For more information related to Arduino digital inputs and pull-up resistors, check out the following link:

https://www.arduino.cc/en/Tutorial/DigitalPins

HLFB APPLICATION EXAMPLES

HLFB Driving a LED

The HLFB circuit is not internally powered; it requires an external 5–24VDC power supply capable of sourcing/sinking at least 1mA, non-inductive. In typical HLFB applications, power is supplied by the PLC, control board, or an external supply. See Appendix D for complete HLFB specifications.

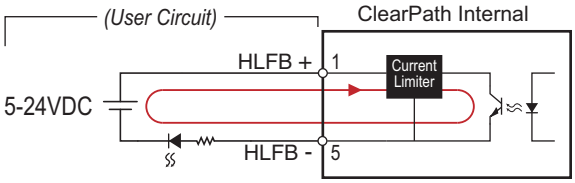

HLFB Driving a LED

HLFB Driving a Brake Via Solid State Relay

ClearPath's HLFB output circuit can directly drive the input of some solid state relays (SSRs) such as the ***Crydom DC60S3*** shown below.

Using the **Servo On** HLFB mode, ClearPath can indirectly control power to devices such as a 24V "power-off" brake. See sketch below for example wiring details.

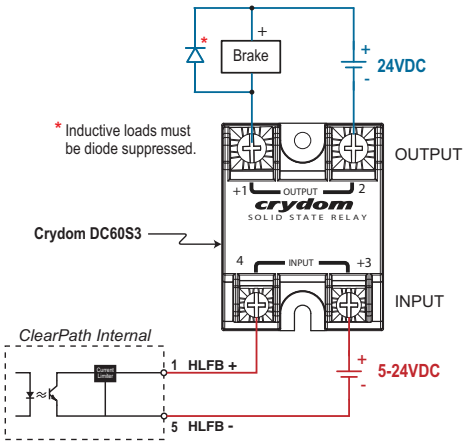

ClearPath HLFB circuit controlling Crydom DC60S3 solid state relay

HLFB MODES: PART 1

This section covers HLFB modes: Servo On, Pulses Per Rev, and Measured Torque. Part 2 covers HLFB modes commonly used in positioning applications.

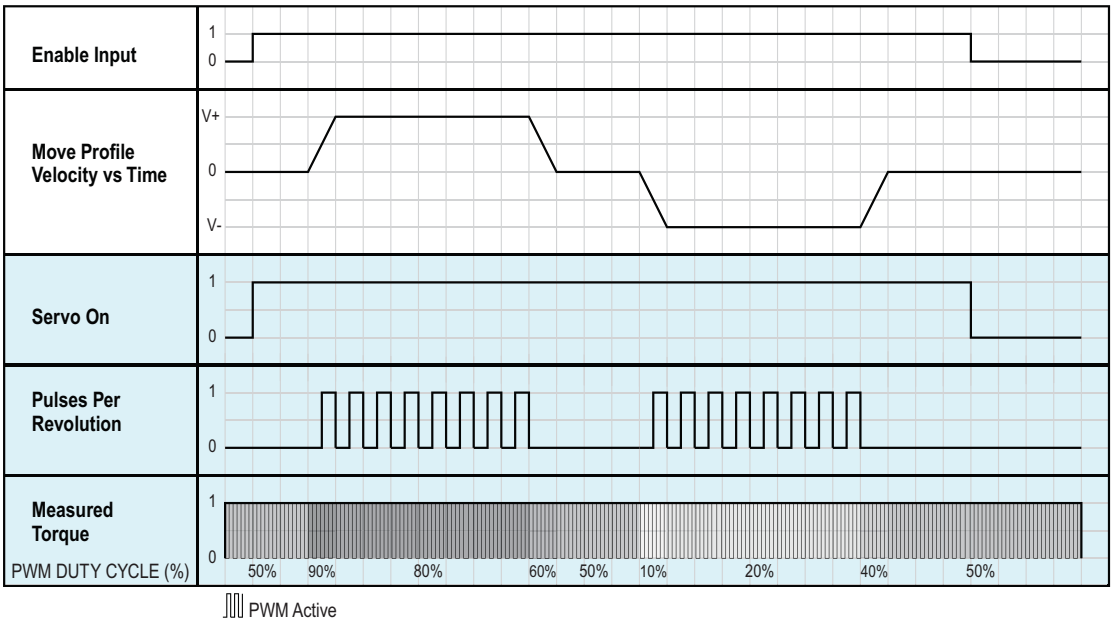

HLFB Timing for General ClearPath HLFB modes

SERVO ON

In Servo On mode, the HLFB output asserts (conducts) when ClearPath is enabled and not in a shutdown state. This signal is often used to monitor ClearPath for shutdowns, or as the control signal for an external brake. Note: the HLFB circuit cannot directly drive an external brake.

PULSES PER REVOLUTION (PPR)

In Pulses Per Revolution (PPR) mode, the HLFB sends a user-selectable number of pulses for each revolution of the motor. The choices are: 1, 2, 4, 8, or 16 pulses per revolution.

Notes

- The frequency of output pulses is proportional to the speed of the motor.
- When motor speed is constant, the PPR pulses will exhibit a ~50% duty cycle.
- When the motor shaft is stopped, the HLFB output can be either "fixed" high or "fixed" low.
- As long as the motor maintains logic power, the output will produce pulses corresponding to motor shaft rotation, *even if the motor is disabled or in a shutdown*.

MEASURED TORQUE

In Measured Torque mode, the HLFB outputs a 45 Hz *or* 482 Hz (user-selectable) PWM waveform that varies in duty cycle between 5% and 95% to indicate direction and magnitude of motor shaft torque as follows:

- 5% duty cycle = 100% peak torque, CW direction
- 50% duty cycle = zero torque
- 95% duty cycle = 100% peak torque CCW direction

HLFB MODES: PART 2

The following HLFB modes are commonly used in positioning applications.

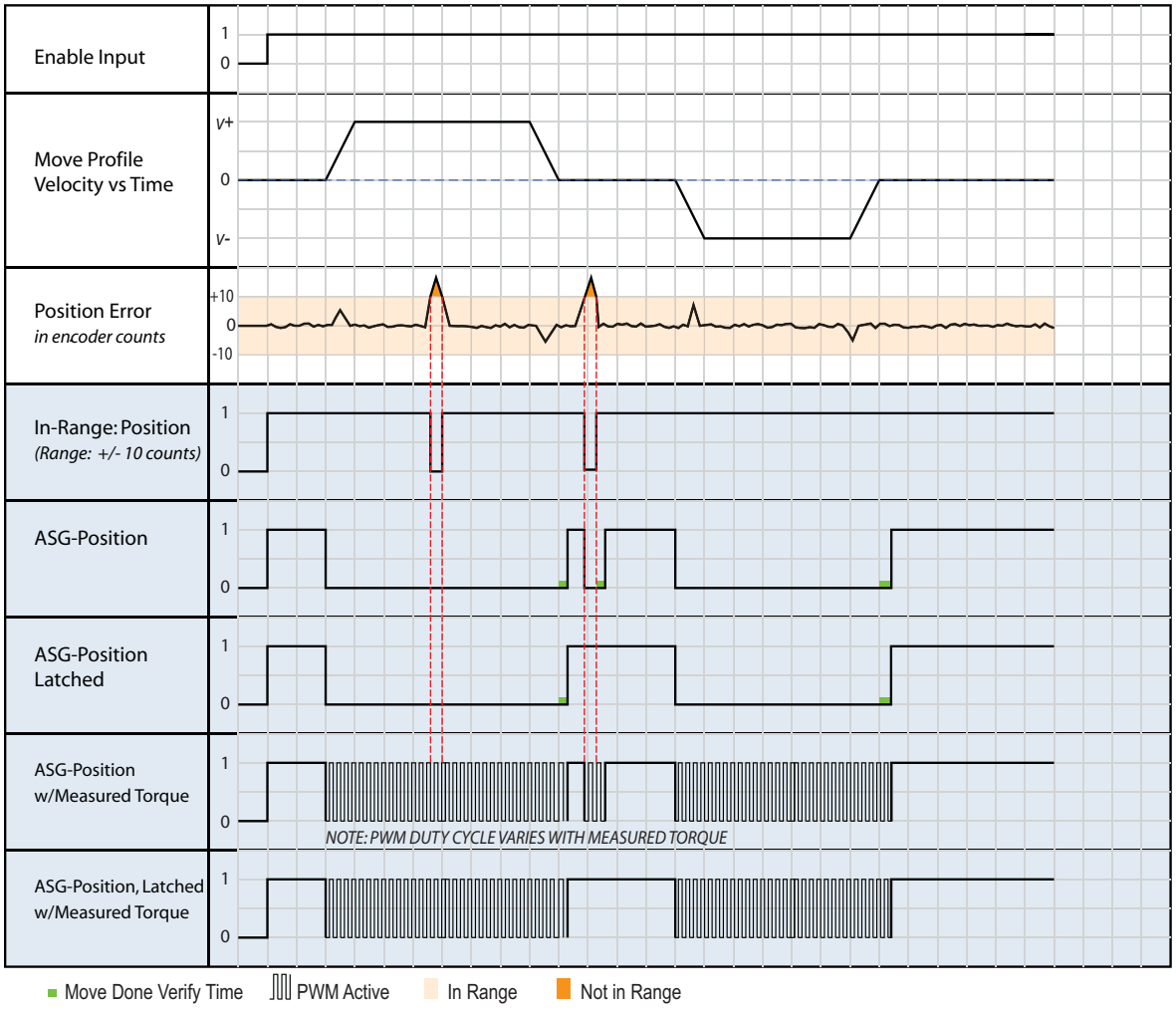

HLFB Timing for Positioning HLFB output modes

IN-RANGE POSITION

The HLFB output asserts (conducts) when the motor is enabled, not shutdown, and the measured motor position is In Range (±X encoder counts) of the current commanded position. The In Range parameters are set in the HLFB Setup dialog.

ASG (ALL SYSTEMS GO) - POSITION

In ASG-Position mode the HLFB output asserts (conducts) when the motor is enabled, not in a shutdown, and is considered "Move Done" (explained below).

"Move Done" occurs when the motor has settled within ±X encoder counts of the final target position, for at least Y milliseconds (where X and Y are user-settable in the HLFB Setup dialog).

Note: The HLFB output deasserts while moving, or if the motor's actual position falls out of the **±**X encoder count In-Range window.

ASG-POSITION LATCHED

ASG-Position Latched works in the same way as ASG-Position except that the HLFB output latches once asserted (conducting). The output remains asserted until the motor is disabled, goes into a shutdown, or receives a motion command.

Even if the motor is momentarily pushed "Out-of-Range" at the end of a move, the HLFB will remain asserted (conducting).

ASG-POSITION WITH MEASURED TORQUE

ASG-Position with Measured Torque works in the same way as ASG-Position except during commanded motion, the HLFB outputs a 45 Hz or 482 Hz (user selectable) PWM waveform that varies in duty cycle between 5% and 95% to indicate direction and magnitude of motor shaft torque as follows:

- 5% duty cycle = 100% peak torque, CW direction
- 50% duty cycle = zero torque
- 95% duty cycle = 100% peak torque CCW direction.

ASG-POSITION LATCHED WITH MEASURED TORQUE

ASG-Position Latched with Measured Torque is a combination of all the previous ASG-Position modes. During commanded motion the HLFB outputs a PWM waveform to indicate motor shaft torque. Once the motor reaches "Move Done" at the target position, the HLFB output latches (stays on) even if the motor is pushed "Out-of-Range" until it is disabled, goes into a shutdown, or receives a motion command.

USER SOFTWARE (CLEARPATH MSP)

SECTION OVERVIEW

This section includes information on the following topics:

- ClearPath MSP System requirements
- Installing ClearPath MSP software
- Communicating with ClearPath
- Tour of ClearPath MSP
- Overview of ClearPath advanced features

MSP MINIMUM SYSTEM REQUIREMENTS

Operating System:	Windows 10 and later
Processor:	1 GHz min.
Memory:	512 MB
HD Free Space:	512 MB
Monitor:	1280 x 1024 pixels or higher
Other:	Sound card with speakers (optional)

INSTALLING MSP

Download the MSP installer from Teknic's website. Follow the on-screen prompts to complete installation.

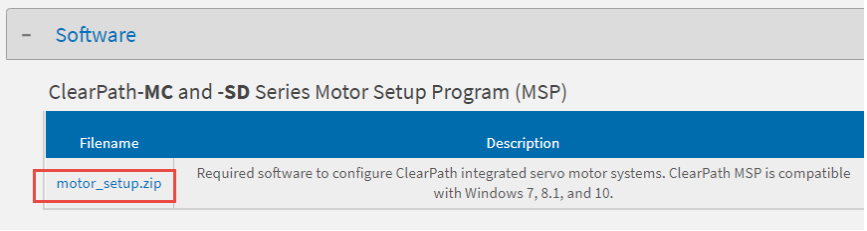

COMMUNICATING WITH CLEARPATH VIA MSP

After MSP is installed on your PC, follow the directions below to establish a communication link between your ClearPath and PC.

Note: Connect ClearPath to your PC to configure operating modes and motion parameters, tune the motor, and use the MSP Scope to evaluate system performance.

ITEMS REQUIRED FOR COMMUNICATION SETUP

- A fully powered ClearPath motor
- A Windows PC with ClearPath MSP installed
- USB 2.0 cable (Type A to C) that supports high speed data transfer **Important:** "Charging only" cables will not work.

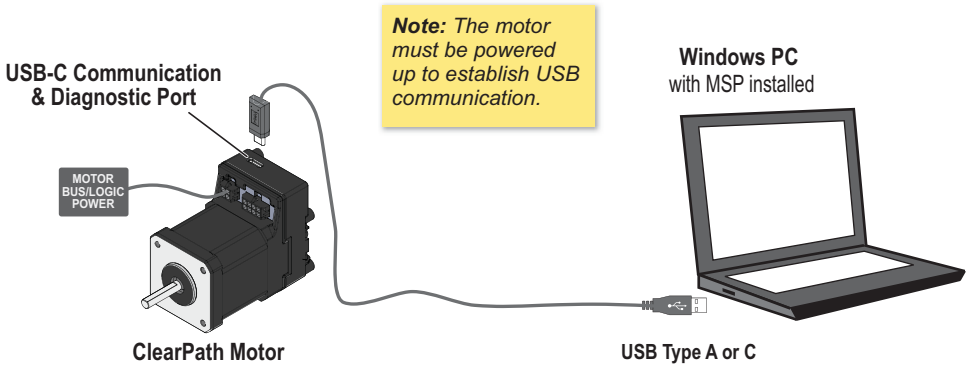

ClearPath Communication Setup

FIRST-TIME COMMUNICATION SETUP

1. **Install MSP** software on a qualified Windows PC. See previous page for Minimum System Requirements.
2. **Power up your ClearPath motor.**
3. **Connect ClearPath to your PC** with a high quality USB cable (Type A to C or Type C to C).
4. **Wait.** In most cases Windows will detect the connected ClearPath and install the USB driver software automatically. This step can take a few minutes to complete. Proceed only after Windows reports the device is installed and ready for use.
5. **Launch** MSP.

Communication Notes

- MSP can communicate with only one ClearPath at a time.
- ClearPath does not require a PC connection during normal machine operation. You *can* connect your ClearPath to a PC at any time to use MSP's diagnostic and troubleshooting tools.

TOUR OF CLEARPATH MSP SOFTWARE

MAIN UI OVERVIEW

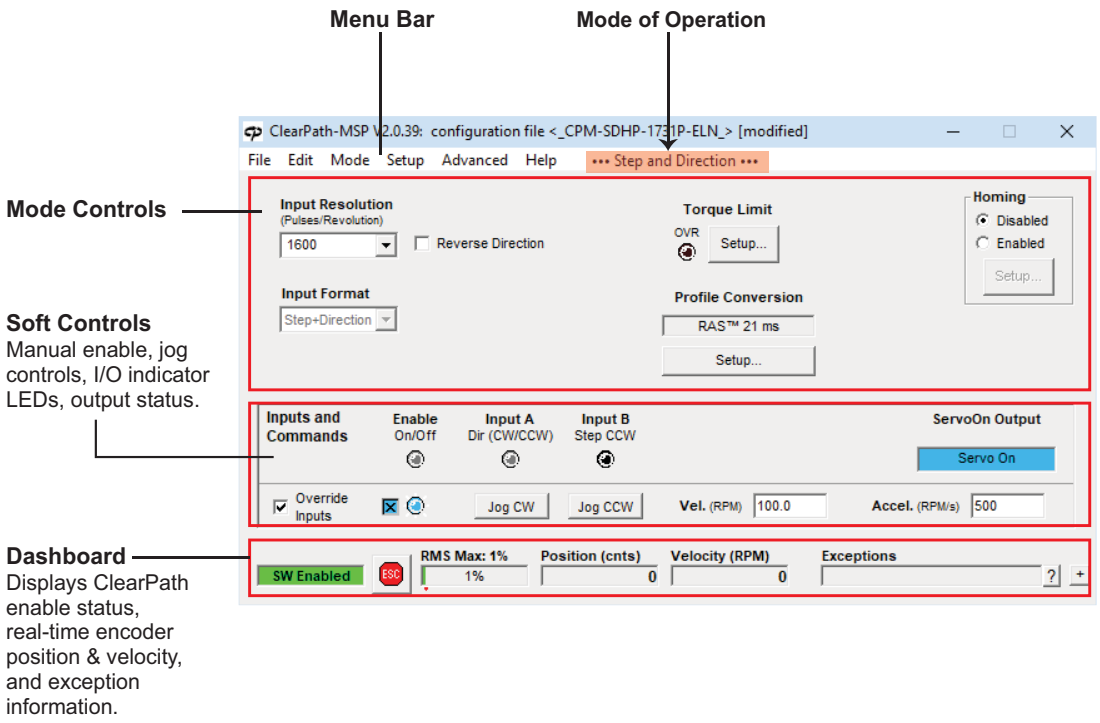

MSP User Interface

MODE CONTROLS

The Mode Controls section contains settings specific to the currently active operational mode. Mode Controls automatically change whenever a different mode of operation is selected. The Mode Controls allow you to:

- **Enter motion parameters and settings** related to the currently selected mode. These parameters include position, acceleration, velocity, torque limits, homing parameters, and more.
- **Access Soft Controls.** Soft Controls allow you to spin your ClearPath with no external hardware required. With just MSP, a powered up ClearPath motor, and a USB cable, you can enable the motor, turn the inputs on and off, command motion, and monitor the HLFB output state. Soft Controls are designed for configuration, testing, and troubleshooting tasks.
- **Set homing parameters**. Homing is discussed in a separate section later in this manual.
- **Set Torque limits.** The Torque Limit settings are explained below.

TORQUE LIMIT SETUP

The Torque Limit Setup dialog lets you specify the maximum amount of torque that your motor is allowed to apply in either direction of rotation.

In addition, **Advanced Settings** allow you to specify different torque limits for each direction of travel, and dynamic torque limits based on motor position (Zone Limits).

To open the Torque Limit dialog, click the **Setup** button in the Mode Controls section (see figure below).

Direction of Applied Torque

Positive torque, (+) = torque applied in the **counterclockwise** direction of rotation (looking into the motor shaft).

Negative torque (-) = torque applied in the **clockwise** direction of rotation (looking into the motor shaft).

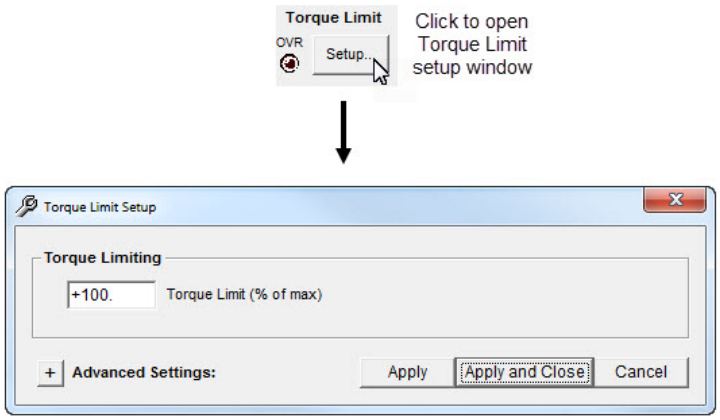

Torque Limit Setup dialog

ADVANCED TORQUE LIMIT SETTINGS

Select "Advanced Settings" to open additional torque limit settings, including **Torque Zone Limiting** and **Symmetric vs. Independent Torque Limiting** (more detail on these features below).

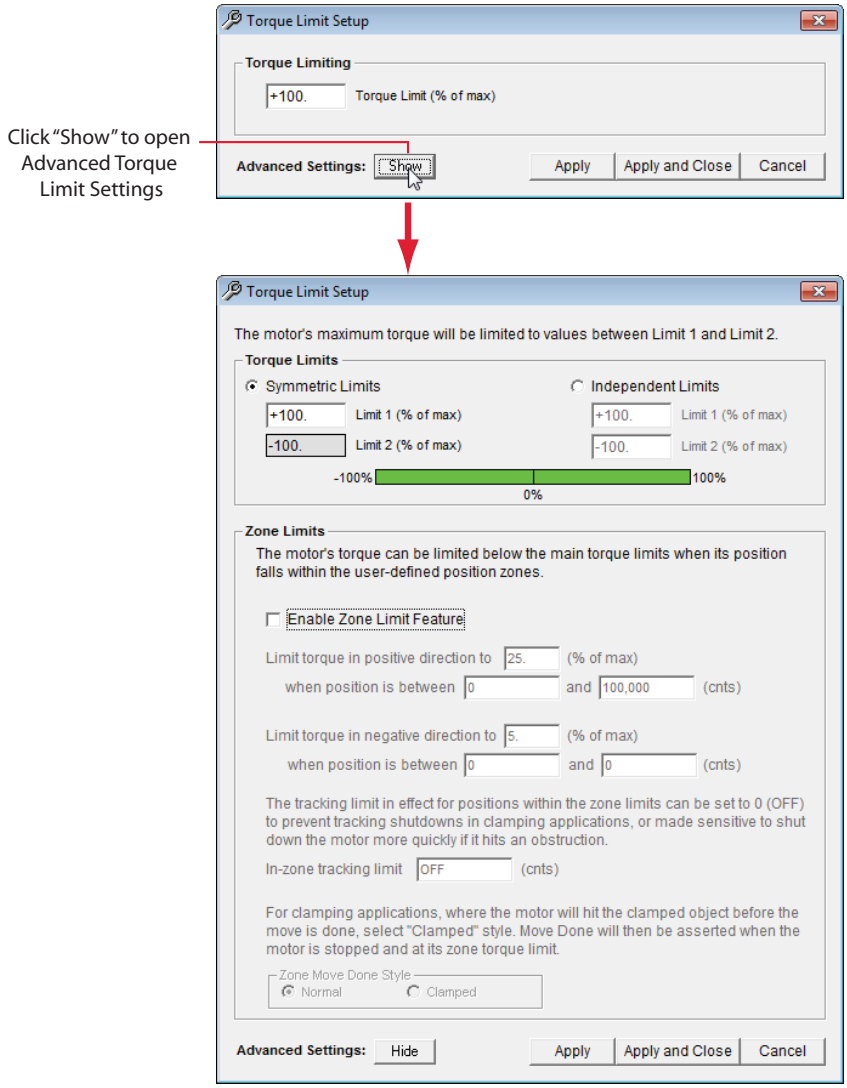

Advanced Torque Limit Setup dialog

Symmetric Torque Limits

Select "Symmetric Limits" if you want the same torque limit for both directions of rotation.

In the example below, torque is capped at 90% of the motor's peak torque in both the CW (-) and CCW (+) directions of rotation.

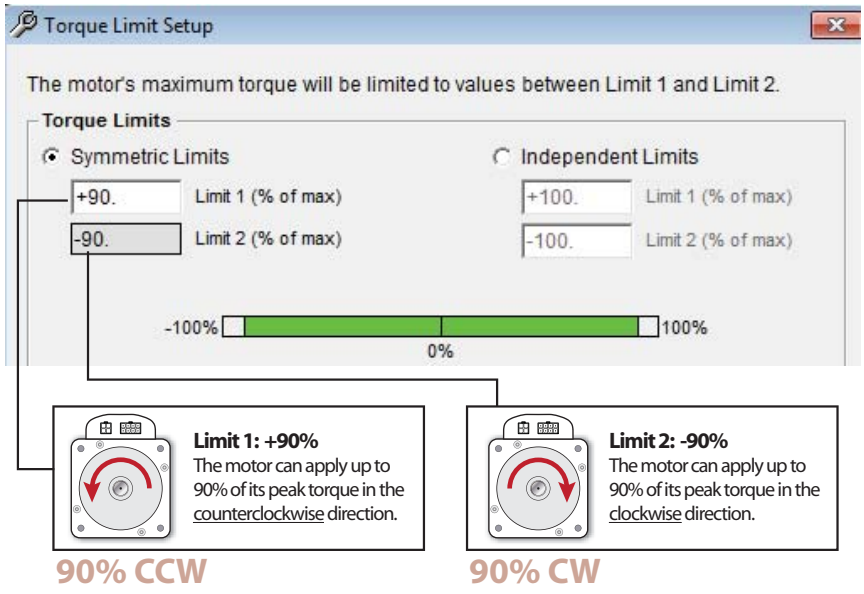

Symmetric Torque Limits

Independent Torque Limits

Select "Independent Limits" if you want to set different torque limits for each direction of travel.

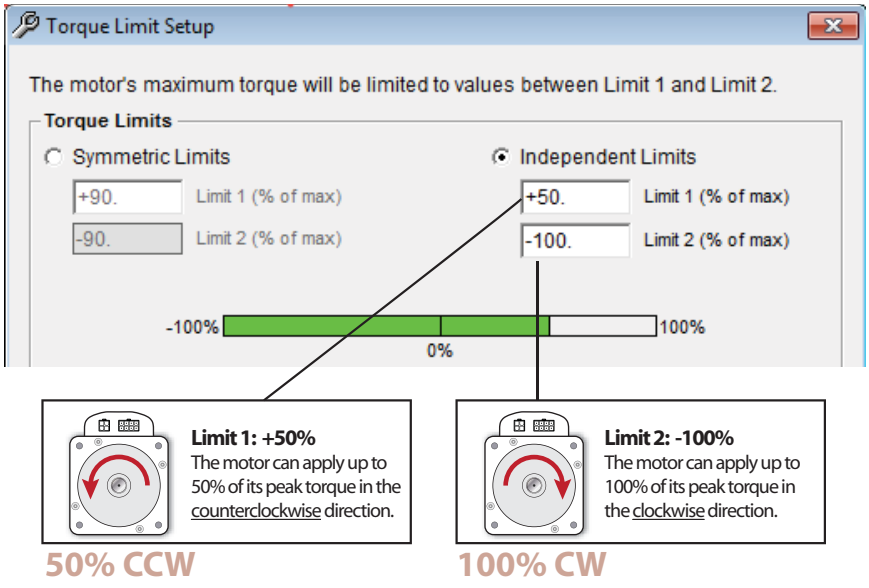

Independent Torque Limits

Zone Limits (Normal)

Use the "Zone Limits" torque feature to set up directional torque limits in different user-defined position zones along an axis of travel. See example below.

Note: The ClearPath system *must be homed* to use Zone Limits.

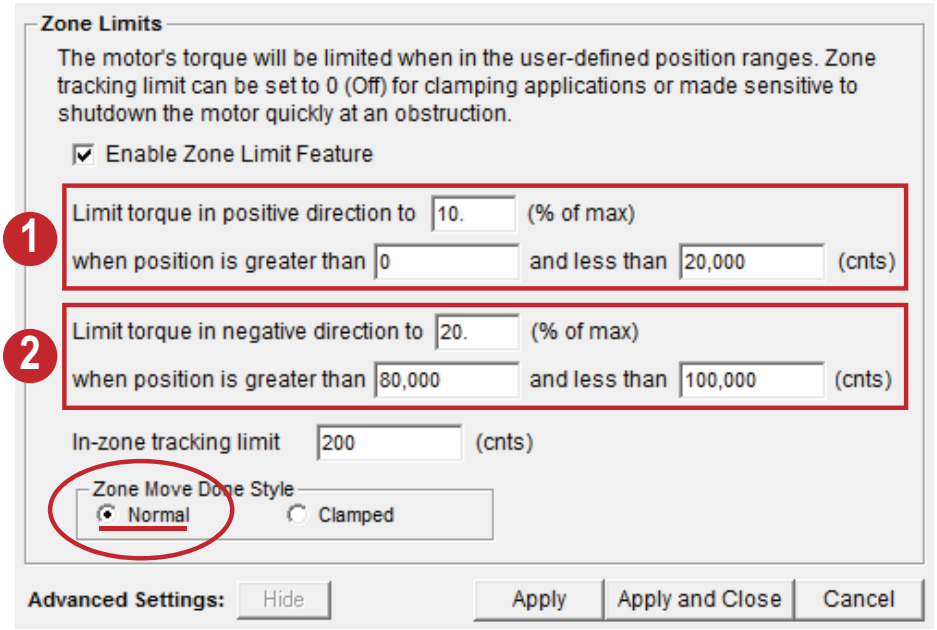

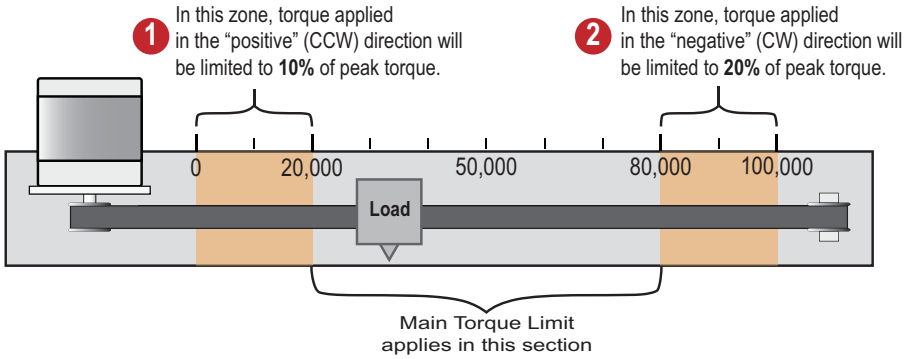

Zone Torque Limits ("Normal" Zone Move Done Style)

Zone Limits (Clamped)

Zone Limits can be particularly useful in clamping applications. In the example below, the moving platform ("Load") is designed to move to the left or right to clamp a work piece against a fixed metal block.

To set up clamping:

1. Define your Zone Torque Limits as desired. See example below.
2. Set the "In-Zone Tracking Limit" to zero (OFF). This will prevent unwanted tracking error shutdowns from occurring during clamping.
3. Set Zone Move Done Style to "Clamped".

Application Tip: *When moving the motor into a clamping position, you must send enough pulses to ensure that the motor is fully pressed into the object being clamped.*

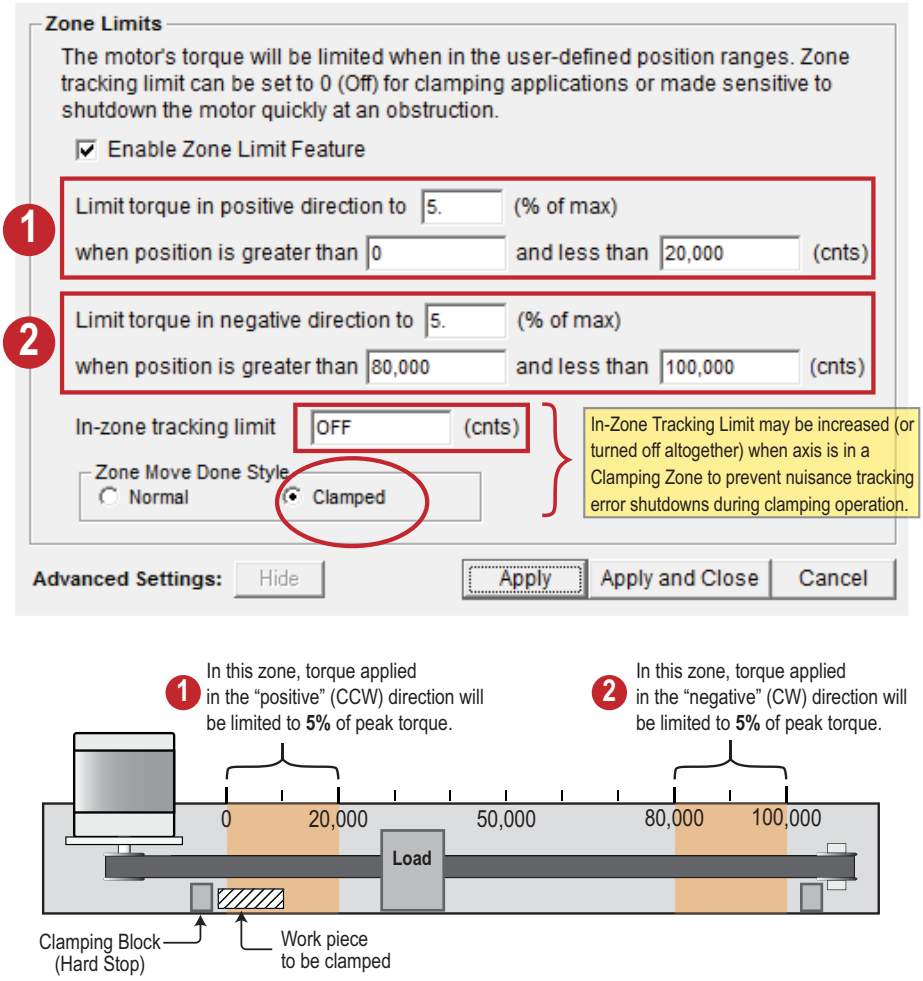

Zone Torque Limits (Clamped Move Done Style)

DASHBOARD

The Dashboard section of the UI contains several virtual gauges and readouts related to your ClearPath motor's performance and operational status.

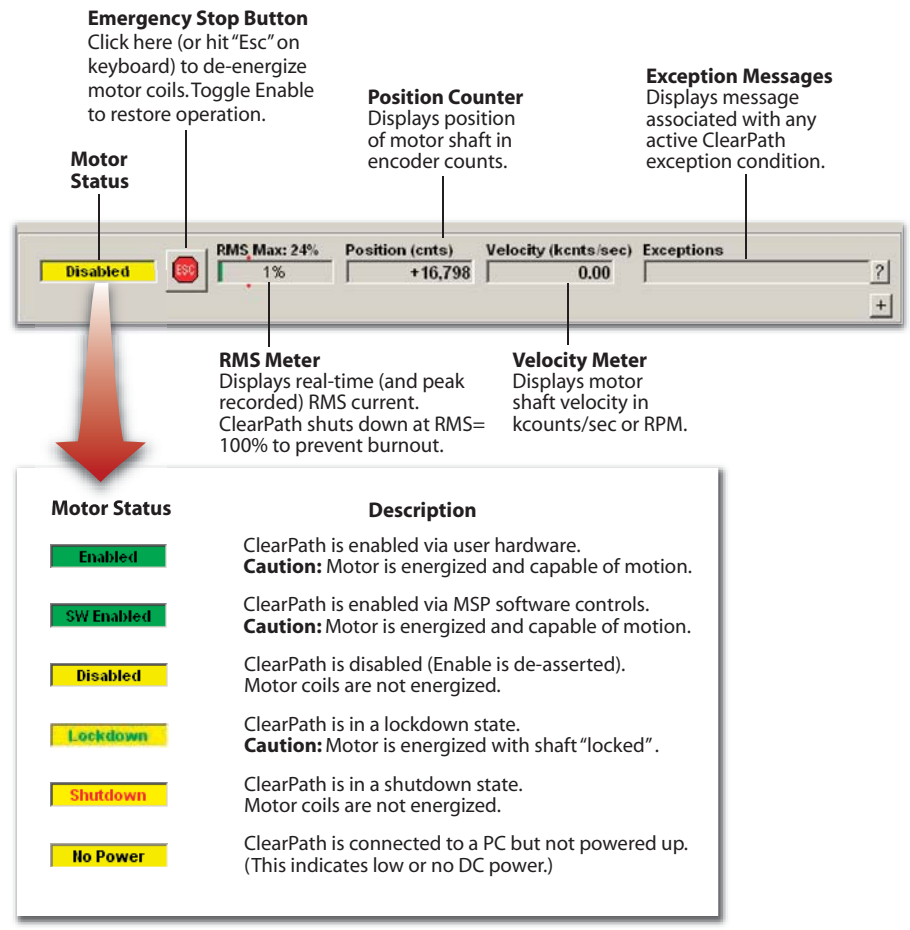

MSP MENUS

FILE MENU

Load Configuration (Ctrl+O)... Use this command to load saved ClearPath configuration files (extension .mtr) to your ClearPath.

Save Configuration (Ctrl+S)... Use this command to save your ClearPath configuration settings to a .mtr file.

Reset Config File to Factory Defaults... This command restores ClearPath to its factory default configuration. I**mportant:** Resetting to factory defaults will cause the motor's existing configuration data to be overwritten.

Export XML file (Ctrl+L)... Teknic support use. This command exports an XML file containing a snapshot of the current Soft Scope data and system information.

Create Support Package... Teknic support use. This command creates a .zip file containing comprehensive system diagnostic data typically for use by a Teknic engineer.

Firmware Update... Use this command to update your motor's firmware.

EDIT MENU

Cut (Ctrl-x), Copy (Ctrl-c), and Paste (Ctrl-v) are the standard Windows Edit commands.

Motor ID. Opens a window that lets you enter a name and brief description for your ClearPath if desired.

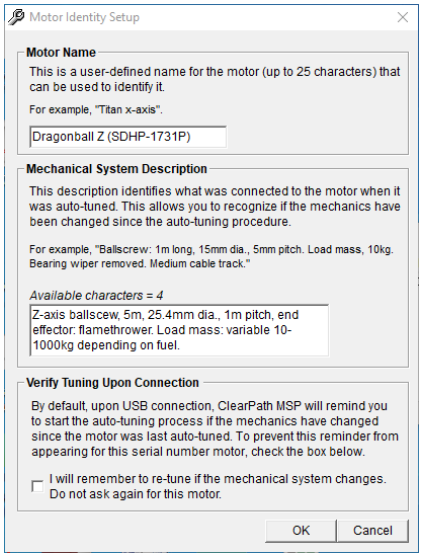

Motor Identity Setup Window

Zero Position (Ctrl+0): Sets the Position Counter to zero. Note: In certain modes, double-clicking the Position Counter directly in the UI will also zero the counter.

Reset RMS Peak This applies to the RMS Meter in the Dashboard section of MSP. Click this menu item to reset *RMS Max* (this is the maximum RMS value recorded since last motor reset).

MODE MENU

Select ClearPath operating modes from this drop down menu. Note: for this motor, Step and Direction is the only valid machine operating mode. The motion generator can be used for testing, but the motor must be switched back to Step and Direction for machine control.

Motion Generator

The Motion Generator is a special op mode that allows you to command test moves and jog your ClearPath motor using software controls only. This means you can exercise your motor and attached mechanics without wiring a single switch or sensor.

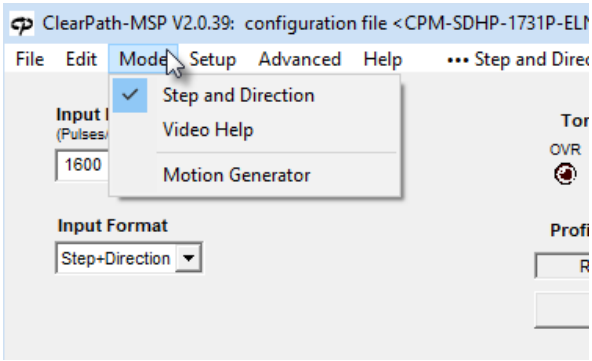

Mode Menu

SETUP MENU

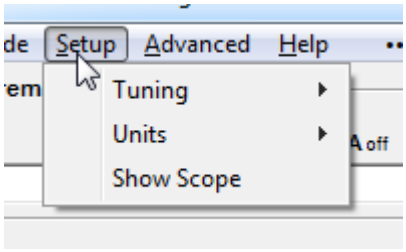

Setup Menu

Tuning>Auto-tune...

Select this menu item to begin an Auto-Tuning session. The Auto-Tune software is designed to walk you through the tuning process in a safe, step-by-step manner.

Important: To avoid personal injury, crashes, and machine damage, carefully read and follow all on-screen instructions presented during the Auto-Tune process.

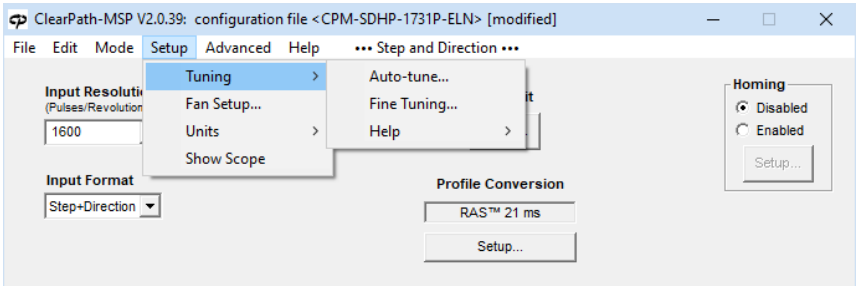

Auto-Tune in the Setup Menu

Tuning>Fine Tuning

This menu item provides a convenient way to "touch up" tuning performance. Turn on the control by checking Apply Fine Tuning. Move the slider left for quieter performance, move it right for increased dynamic stiffness. Uncheck to turn Fine Tuning off.

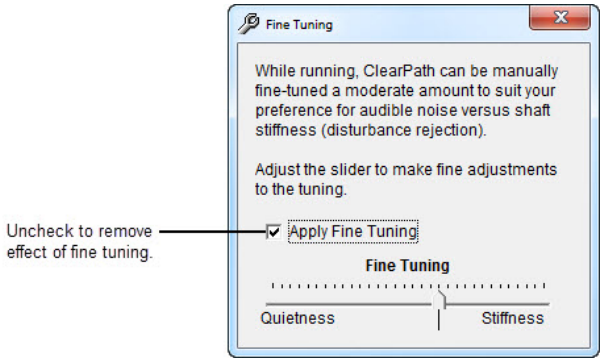

Fine Tuning Control

Units

Use the Units menu item to tell MSP which units to display for velocity and acceleration. Velocity and acceleration can be displayed in terms of encoder counts or RPM. Distances are always displayed in encoder counts.

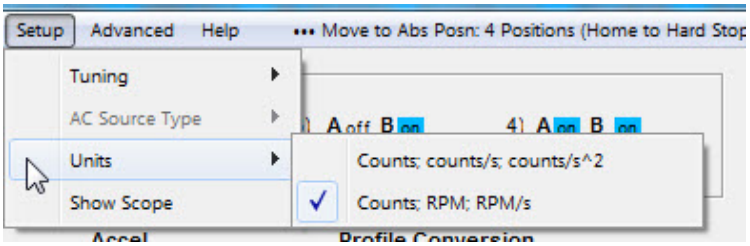

Units Selection Menu

Show Scope

This option opens MSP's built-in software oscilloscope ("Scope" for short) for troubleshooting and diagnostics.

See section, " MSP Software Scope ", for more detailed information on the features and functions of the MSP Scope.

ADVANCED MENU

Advanced Menu item are described below. The Advanced menu provides access to additional specialized features and settings.

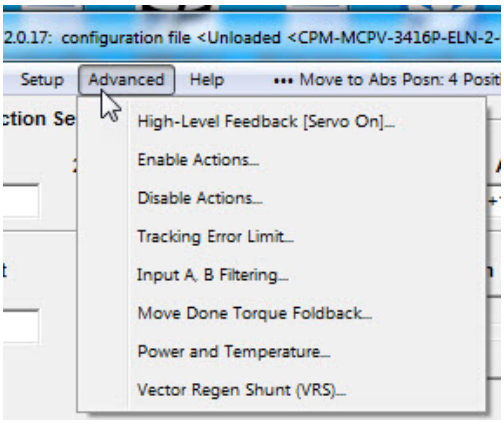

Advanced Menu

High-Level Feedback...

(Abbreviated "HLFB".) This is ClearPath's digital output. The HLFB dialog lets you choose from several different HLFB modes. HLFB can send a signal to indicate things like move completion, turn on brake, motor has shut down, and several more.

For more details on HLFB modes and timing, please refer to the *Inputs and Outputs* chapter of this manual.

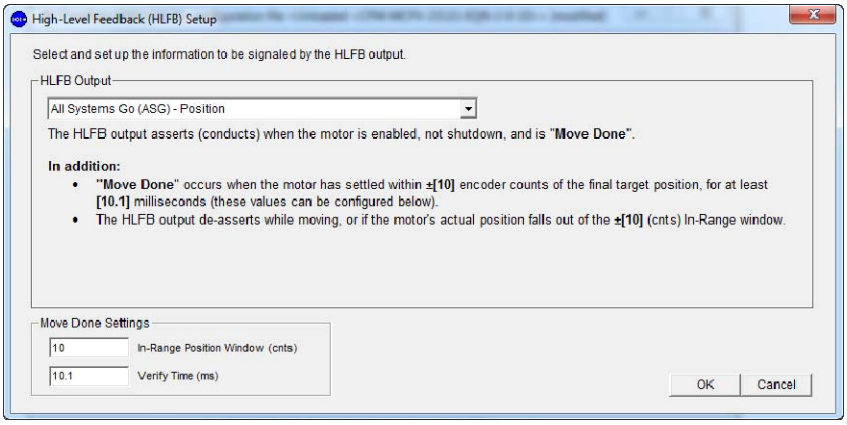

High-Level Feedback dialog (set to ASG (All Systems Go) mode)

Enable Actions...

Select this menu item to configure ClearPath's **Position Recovery** feature. The Position Recovery feature returns your ClearPath motor to its last commanded position if it is moved while disabled, or if main DC bus power drops out temporarily. See use cases below.

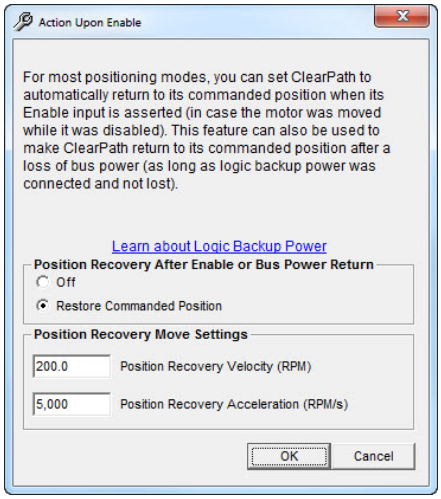

Action Upon Enable dialog

Position Recovery: Example #1

Your motor was operating normally, but then went "disabled" due to a shutdown. While disabled, it was moved an unknown distance from its last commanded position. You need it to return to its last known position the next time it is enabled. Note: Main DC bus power must be on at all times in this scenario.

Result

If Position Recovery is on, and if Homing is set to "Home on first enable after power up" (or turned off) enabling the motor will cause it to automatically return to its last commanded position at the specified velocity and acceleration.

Position Recovery: Example #2

Your motor was operating but then loses DC bus power for a short period of time. You need the motor to return to its last commanded position when main DC power is restored. Note: a POWER4-HUB with uninterrupted logic backup power is required in this scenario.

Solution: If Position Recovery is active, and the Logic Power Backup Supply from the POWER4-HUB-S is uninterrupted, when main DC bus power is restored the motor will automatically return to its last commanded position.

Disable Actions...

This dialog lets you tell ClearPath what stopping method to use when the motor is disabled, either dynamic braking, decelerate under power, or coast to a stop.

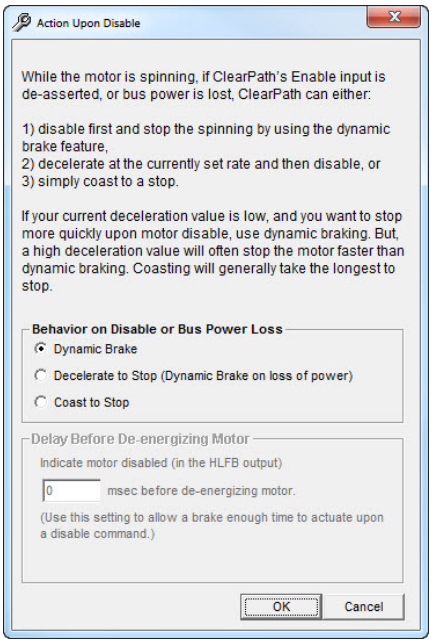

Action Upon Disable

Tracking Error Limit...

The Tracking Error Limit tells ClearPath how much positional error to allow before throwing an exception and shutting down.

Tracking Error is the difference between ClearPath's *commanded* position and its *actual* position (in units of encoder counts). The phrase "Tracking error" is used interchangeably with the phrase "position error" throughout this manual.

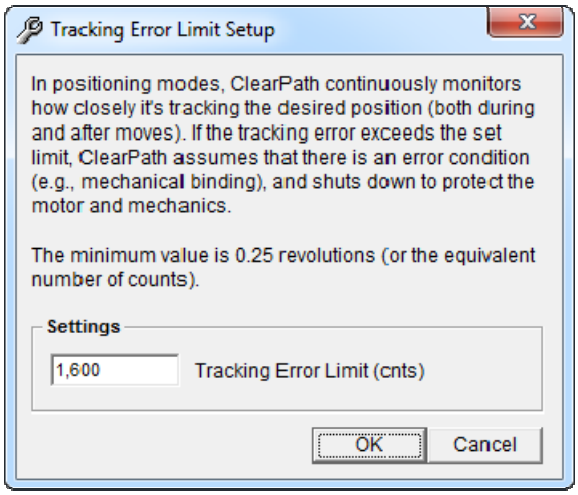

Tracking Error Limit Setup

Move Done Torque Foldback...

This dialog allows you to automatically limit ClearPath's available torque when ClearPath has achieved "Move Done" status.

The Move Done Criteria consist of two parameters: the “In-Range Window” and the “Verify Time”. For complete information, please read the dialog window below.

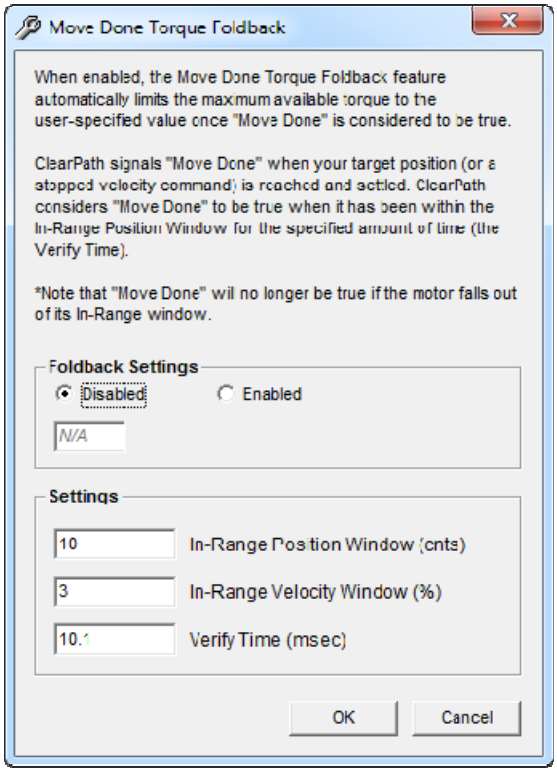

Move Done Criteria Setup

Power and Temperature...

Use this dialog to:

- Tell ClearPath whether to shut down or just issue a warning when DC bus voltage falls below the minimum operating voltage setting as can happen when a power supply droops.
- View the current temperature of your ClearPath drive board.
- Set the temperature threshold at which ClearPath throws an over-temperature shutdown. This should typically remain at the default setting.

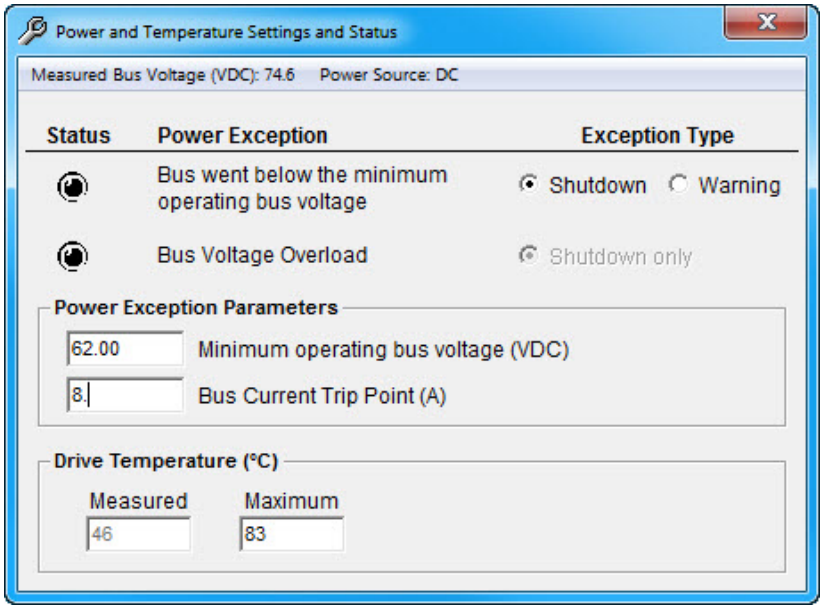

Power and Temperature Settings

Vector Regen Shunt (VRS)...

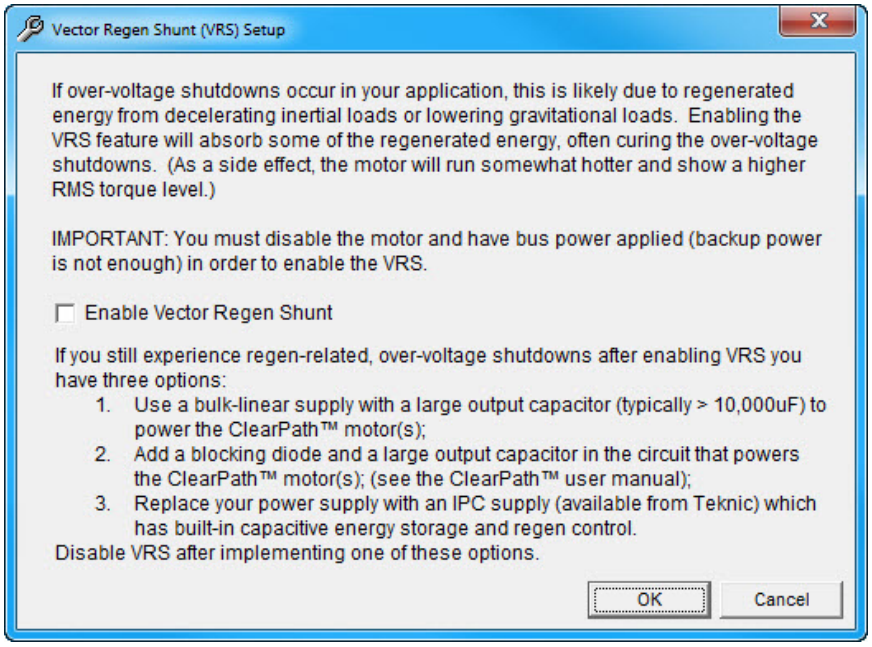

Vector Regen Shunt (VRS) Setup

HELP MENU

The Help menu provides additional resources for topics you may have questions on.

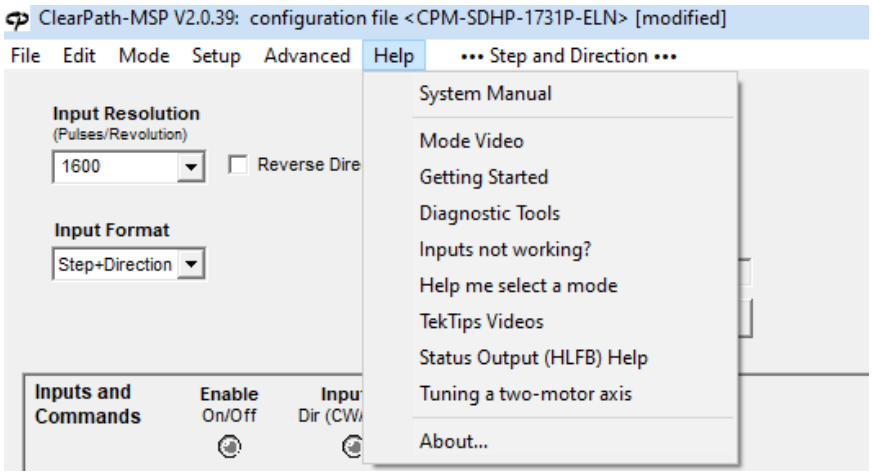

Help Menu

Help menu topics include the following:

- **System Manual:** Select this option to navigate directly to the user manual for your specific product.
- **Mode Video:** Select this option to navigate to the demo video or manual.
- **Getting Started:** This option will take you directly to a video that explains how to initially set up your ClearPath motor. The video walks you through different MSP features and parameters.

The video also includes a brief demo of ClearPath testing with MSP.

- **Diagnostic Tools:** Click this option to watch a video that explains how to use MSP's built-in software oscilloscope and diagnostic tools for troubleshooting and performance measurement.
- **Inputs not working?:** This resource will take you to a simple step-by-step process for how to test the ClearPath inputs if you are trying to troubleshoot a potential issue.
- **Help Me Select a Mode:** Select this option to navigate to the Teknic "Videos" page. From there, you can view various demo videos featuring each ClearPath operational mode.
- **TekTips Videos:** This option will take you to the Teknic "Videos" page where you can watch different tutorials on topics ranging from Auto-Tune to Teknic's RAS feature to the differences between Stepper motors and ClearPath servo motors.
- **Status Output (HLFB) Help:** Click this menu item to be taken directly to the "HLFB" section in the ClearPath User Manual.
- **Tuning a two-motor axis:** Select this option to learn more about the process for tuning a dual-driven axis.
- **About...:** This menu item will give you a summary of your ClearPath specifications including the model number, hardware version, firmware version, MSP Installer version, serial number, and other useful information.

MSP SOFTWARE SCOPE

This section contains a discussion of the main features and functions of the MSP Scope.

OVERVIEW

The MSP software oscilloscope (or just "scope") takes real-time streaming data from your ClearPath motor and plots it on a virtual display similar to that of a hardware oscilloscope.

The scope can be used to display your motor's real-time shaft torque, position error, commanded velocity, acceleration, and more. The scope is an indispensible tool for those who routinely analyze and troubleshoot electrical, mechanical, and motion-related problems on machines with ClearPath motors.

To open the scope in MSP navigate to ***Setup>Show Scope*** or click the "+" button in the lower right of the main UI window.

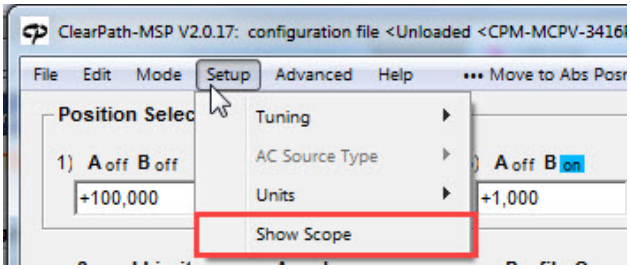

Opening the MSP Scope

SCOPE FEATURES

- 13 scope variables
- 4 trigger modes
- Adjustable time base, range, reference "zero" level, and trigger position
- Dual Trace Capability: 2 stored traces + 2 live traces.
- Twelve trigger source presets
- Click-and-drag cursors for precise time and amplitude measurements
- Strip Charts that synchronously display motion, drive, and I/O event timing
- Envelope mode that continuously stores and updates maximum and minimum trace values over a user-defined period of time.
- Cursor "Zoom" feature to help you quickly magnify a user-defined area of the scope display

SCOPE USER INTERFACE & CONTROLS

The MSP Scope display was designed to look and work like a hardware oscilloscope. MSP Scope has 10 major vertical divisions (the time axis), and 8 major horizontal divisions (the amplitude axis).

See below for a list of MSP Scope features numbered on the figure below.

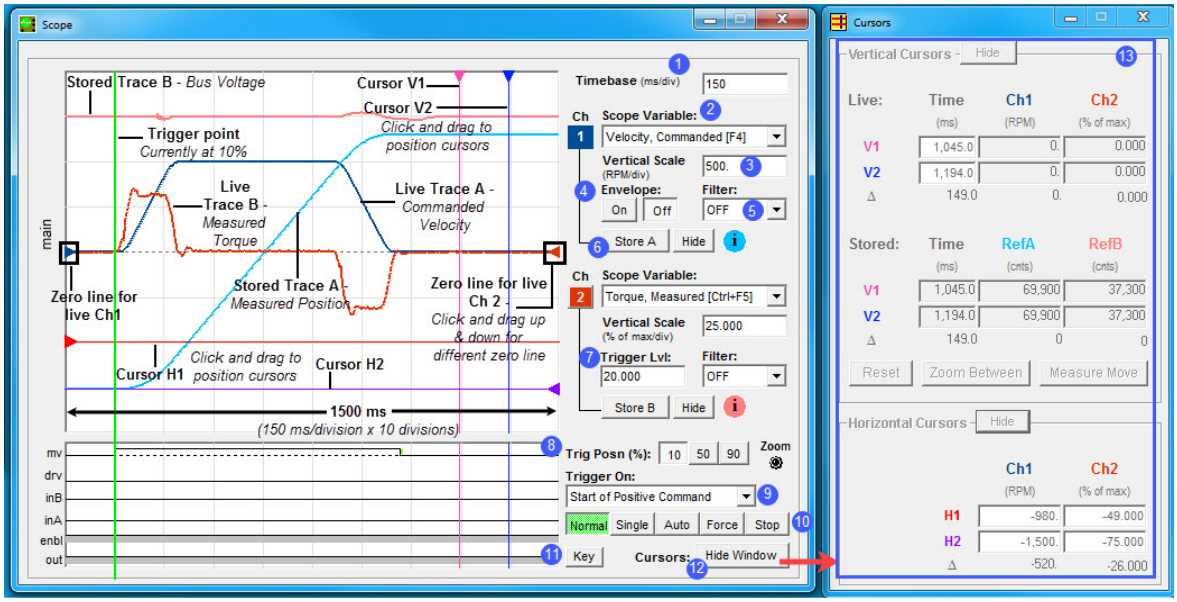

MSP Scope and Cursors window

1 **The Timebase** field lets you set the scale of the time axis (in units of ms/division). This setting lets you control how a waveform fits (horizontally) on the scope display.

2 **The Scope Variable** drop down menu lets you select any of 13 ClearPath motion control variables to display. The Scope variables are listed below and described in detail on the next page.

MSP Scope Variables *(see next page for full descriptions)*

- Position Error
- Commanded Velocity
- Measured Torque
- Utilized Torque
- Velocity Error
- Bus Voltage
- Max Phase Voltage
- Commanded Torque
- Measured Position
- Commanded Acceleration
- Commanded Jerk
- Torque Error
- Measured Velocity

Scope Variable	Definition
Position Error [F3]	Position Error (also referred to as "Tracking Error") displays the difference between commanded position and actual position.
Velocity, Commanded [F4]	Commanded Velocity displays the actual commanded velocity vs. time motion profile coming from your controller or MSP.
Torque, Measured [F5]	Measured Torque graphs the actual torque that the motor is using during (as a percentage of peak torque).
Torque Utilization [F6]	Torque Utilization plots the percentage of *available* peak torque in use over time. This is particularly useful if you have a power limited motor and need to know how close to available peak torque the motor is operating.
Velocity Error (Gated)	Velocity Error shows the difference between commanded velocity and actual velocity during constant velocity command.
Bus Voltage	Bus Voltage displays ClearPath's DC bus voltage in real time.
Max Phase Voltage	Max Phase Voltage displays the greatest voltage running through ClearPath's phase wires.
Torque, Commanded	Commanded torque displays the required torque to complete the given command from your controller or MSP.
Position, Measured	Measured Position displays the actual position of ClearPath in terms of encoder counts.
Acceleration, Commanded	Commanded Acceleration shows the actual acceleration command coming from your controller or MSP.
Jerk, Commanded	Commanded Jerk displays the derivative of the commanded acceleration.
Torque Error (peak)	Torque Error displays the difference between commanded and actual torque.
Velocity, Measured	Measured Velocity displays ClearPath shaft velocity in either RPM or encoder counts per second.

3 **The Vertical Scale** lets you change the scale of the amplitude axis in terms of units per division. This allows you to control how a waveform fits (vertically) on the Scope display.

4 **Envelope Mode** allows you to capture the minimum and maximum amplitude envelope of a displayed variable, typically generated over many sweeps of the scope.

Important note: *To use Envelope Mode,* ***you must be on Channel 1****, and running a repeat move, and have the scope's trigger mode set to "Normal".*

5 **Filter** "cleans up" the appearance of the live trace by removing higher frequency data content. This has an averaging effect on the displayed waveform that will generally reduce visual clutter.

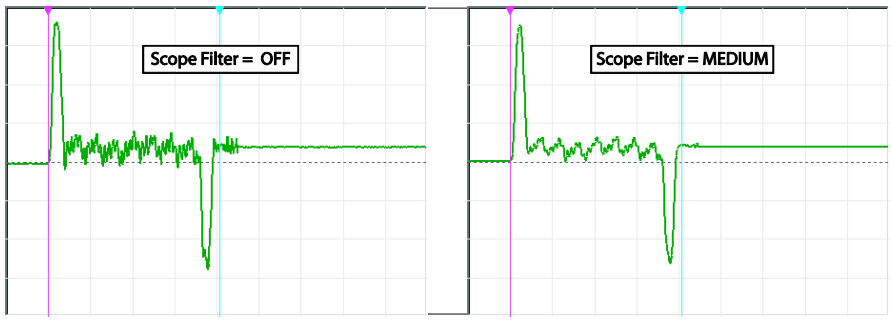

Effect of Scope Filter on trace display

Note: The Scope Filter has no effect on motor performance. *It only changes the appearance of displayed scope data.*

Note: Be careful! A high filter setting may filter out meaningful data (fast peaks in particular).

Tip: In most cases Scope Filter can be left "OFF" or at the lowest non-zero setting.

6 **Trace Storage controls** allow you to save and display one trace per channel on the scope display. Just capture a waveform and click either the "Store A" or "Store B" button. The selected trace is then stored and displayed in either pink (Store A) or blue (Store B). Hide or show either stored trace by clicking its associated Show/Hide button.

7 **The Trigger Level** lets you select the amplitude (of the variable you are currently measuring) at which the scope will trigger.

Note: Trigger Level can only be used when Trigger Source is set to "Rising Slope" or "Falling Slope".

Tip: Use Trigger Level when the Trigger Mode is set to "Normal" or "Single" to facilitate waveform display at a fixed trigger point.

8 **Trigger Position** buttons allow you to place the trigger point on the left, middle, or right side of the scope display grid. This is useful for viewing events on the scope that occur before, during, or after the trigger event.

9 **The Trigger Source ("Trigger On")** drop down menu lets you choose what condition(s) must be met before scope data collection begins. The following Trigger Source options are available:

If Trigger Source is set to:	MSP Scope will:
Start of Positive Command	Trigger at the start of any positive move; useful for tuning.
Start of Negative Command	Trigger at the start of any negative move; useful for tuning.
Start of Any Command	Trigger at the start of any move (positive or negative); useful for assessing bi-directional tuning performance.
End of Positive Command	Trigger at the end of any positive move; useful for assessing settling performance.
End of Negative Command	Trigger at the end of any negative move; useful for assessing settling performance.
End of Any Command	Trigger at the end of any move (positive or negative); useful for assessing bi-directional settling.
End of Positive Settled Move	Trigger at the end of any positive move after Move Done criteria are met; useful for assessing settling performance.
End of Negative Settled Move	Trigger at the end of any negative move after Move Done criteria are met; useful for assessing settling performance.
End of Any Settled Move	Trigger at the end of any move (positive or negative) after Move Done criteria are met; useful for assessing settling performance.
Voltage/Torque/Speed Limit	Trigger on first occurance of saturation (voltage *or* torque) or upon speed limiting; useful for determining which moves (or segments of moves) exceed these thresholds.
Drive Shutdown or Exception	Trigger on the assertion of an exception or safety shutdown; useful for determining the operational status at the time of a fault.
Rising Slope	Trigger on the rising edge of the active waveform.
Falling Slope	Trigger on the falling edge of the active waveform.

10 **Trigger Mode** settings allow you to specify exactly when to start data acquisition. These controls are analogous to the trigger modes found on a hardware o-scope.

- **Normal** - Causes scope data collection to start whenever a valid trigger source is detected.
- **Single** - Works the same as *Normal* mode, except it captures only a single data set when a valid trigger source is detected. After the single sweep capture, data collection automatically stops.
- **Auto** - This is the scrolling, "always on" setting. Data is continuously collected, refreshed, and displayed regardless of the trigger source setting.
- **Force** - Forces the scope to trigger immediately, regardless of trigger source setting. As with Single mode, only one data set is collected and displayed; then data collection stops.
- **Stop** – Causes scope data collection to stop.

11 **Legend - Scope Traces -** This is a visual key to the symbols you will see on the MSP Scope display.

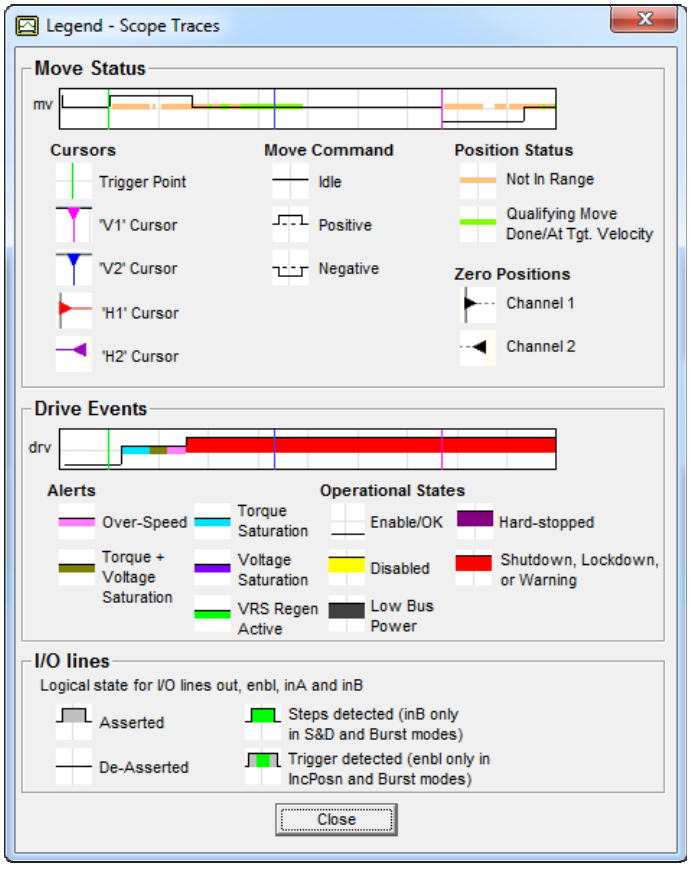

MSP Scope Legend

12 **Show/Hide Window** opens or closes Cursor Control Window.

13 Cursors Window *(see window at right.)*

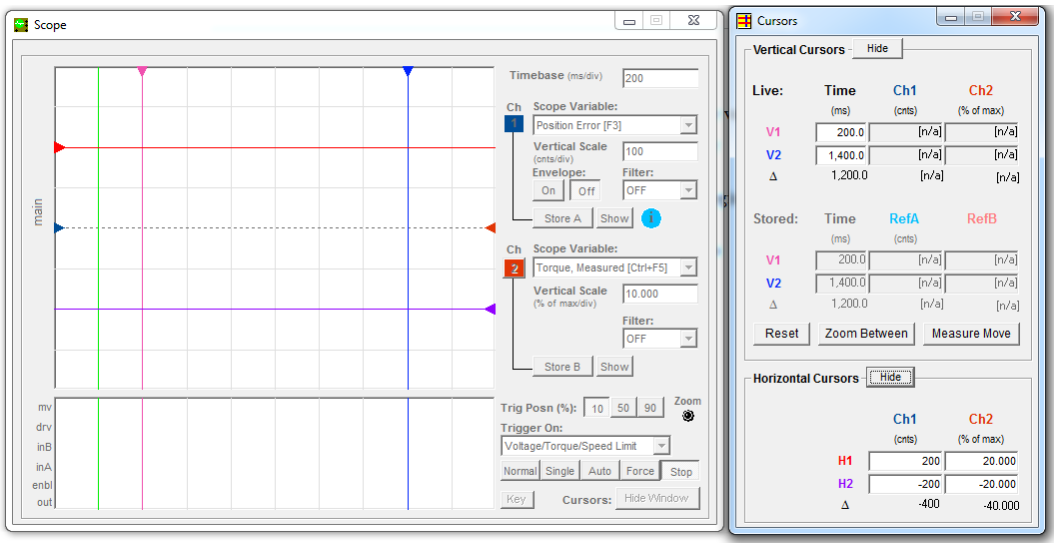

MSP Scope Display (left) and Cursors window (right)

The Cursors window features:

- **Real-time, numeric display** of cursor data, including delta calculation showing the difference between cursor values.
- **"Zoom Between" button** allows one-click magnification of the area of the scope display between the vertical cursors.
- **"Measure Move" button** automatically places the vertical cursors at the beginning and end of a "live" move.
- **"Hide" and "Show" buttons** let you view or hide vertical and/or horizontal cursors as desired.
- **"Reset" button** automatically relocates cursors to their default positions.

STRIP CHART

The Strip Chart can display a number of additional events and conditions that occur in sync with the primary waveform capture. Using the Strip Chart you can view move status (mv), drive events (drv), and I/O states in real time. And, because the Strip Chart display is always auto-synchronized to the main scope trace, there are no settings to deal with.

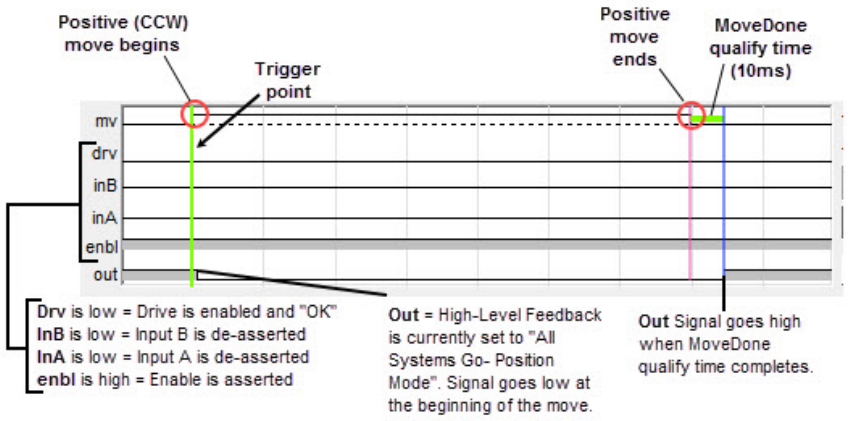

MSP Strip Chart

CLEARPATH-SD OPERATIONAL MODES

The ClearPath SD (Step & Direction) family was designed to replace stepper motor and drive systems with a single, cost-effective unit.

Note: ClearPath SDSK and SDHP models accept Quadrature AB signal sources as well as Step & Direction signals.

STEP & DIRECTION

Available on
SDSK + SDHP

MODE DESCRIPTION

Enable your ClearPath and send industry standard step & direction signals to Inputs A and B, and ClearPath faithfully follows them. Use the included RAS (Regressive Auto Spline) feature to reduce vibration and noise. This mode is great for replacing stepper motor/drive systems with a single, compact device that costs less and does more.

ClearPath-SD models require step and direction signals generated from an external device such as an indexer, microcontroller, or similar.

Stepper Replacement **Step and Direction Input Control**

Signal	Function	Input Type	Example Timing
Input A	Direction	Logic: High=CW Low=CCW	
Input B	Step	Pulse: Digital Step Input	
Enable	Enable	Logic: High=Enable Low=Disable	
Trigger	NA	NA	
Notes: Absolute Minimum Pulse Width = 750nS.			v t Motor velocity vs. time

Step and Direction Inputs and Timing

I/O FUNCTIONS

Enable Input - Asserting this input energizes the motor shaft.

Input A - Direction input.

Input B - Step input.

Output (HLFB) - See HLFB section for available modes.

Notes:

- Minimum pulse width (for high and low states) = 750 nS. See Step & Direction Pulse Timing Information (later in this section) for details.
- Maximum pulse input frequency = 667kHz **at 50% duty cycle.**
- Motion occurs on the falling edge of each step input pulse.
- Time before Disable = 10 mS.

MODE CONTROLS

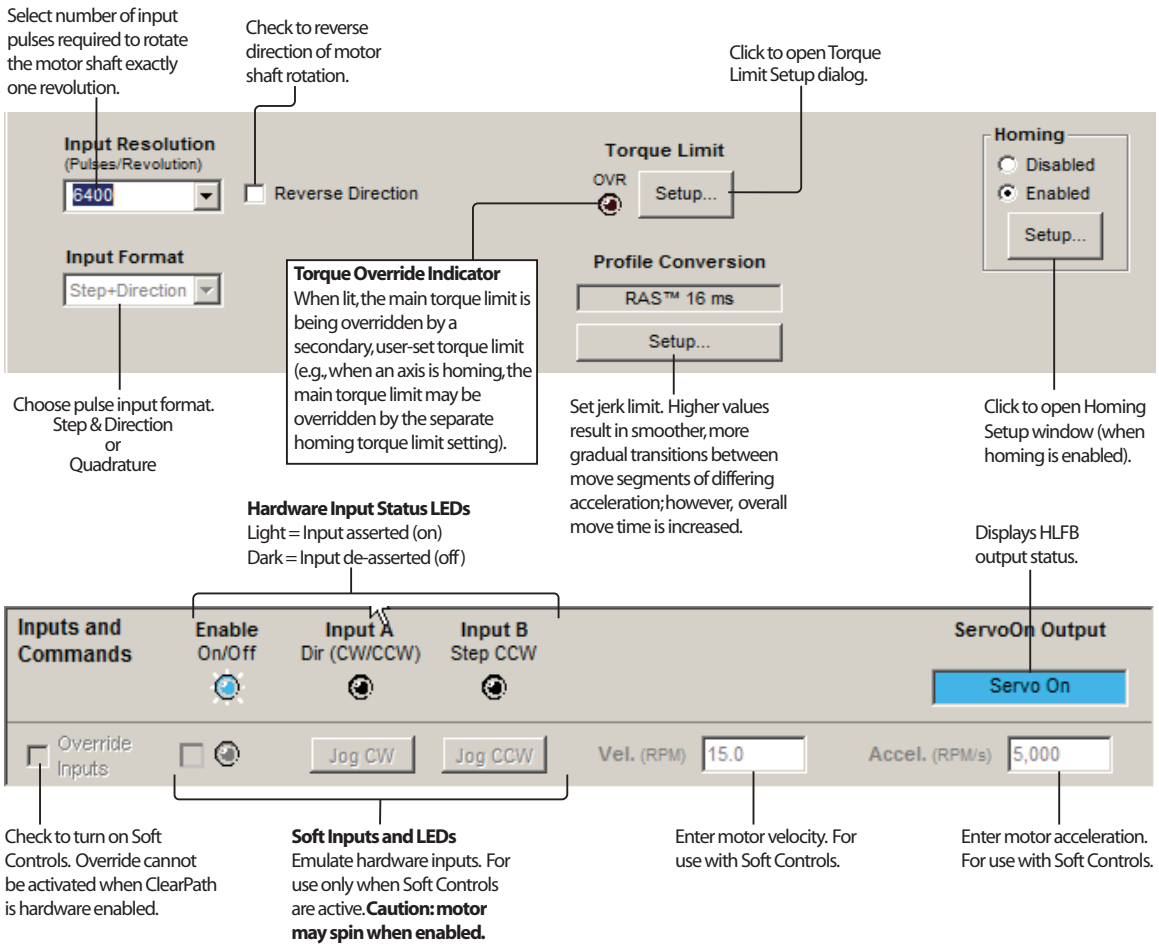

STEP & DIRECTION PULSE TIMING INFORMATION

This section contains:

- A step timing diagram applicable to ClearPath **Step and Direction mode** (SD models).
- A table listing minimum step (pulse) timing requirements based on typical interface circuits and controller cable lengths.
- A section discussing **Step Timing Errors**, including common causes and fixes. This type of alert occurs when ClearPath identifies a problem with the timing and/or quality of the incoming controller pulses.

STEP/PULSE TIMING DIAGRAM

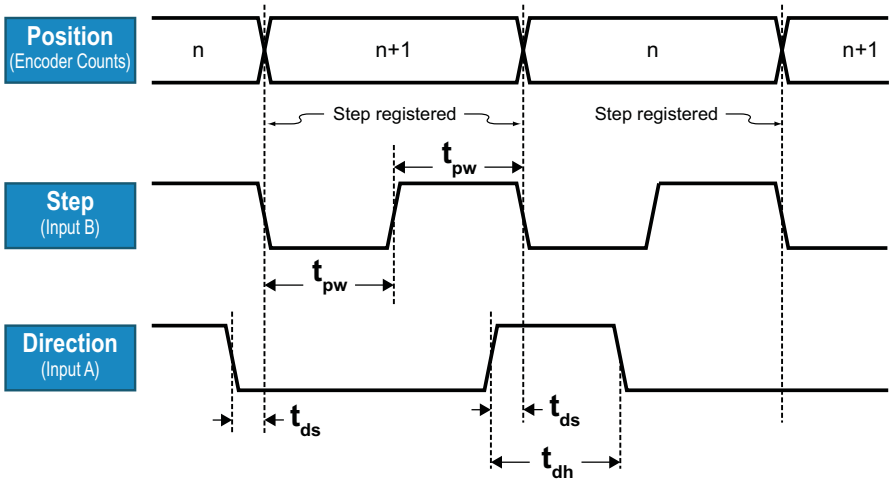

ClearPath Minimum Step/Direction Timing

- t_{pw} – Absolute minimum step pulse width: **750 nS** (applies to high and low states)
- t_{ds} – Absolute minimum time between direction change and step input change: **25 nS**
- t_{dh} – Absolute minimum direction hold time: **1 uS**

The timing diagram above shows *absolute minimum* step and direction timing values as measured directly at the ClearPath motor inputs. For recommended pulse width settings at the controller, see table ***Minimum Pulse Width Settings for Step/Dir*** (next page).

MINIMUM STEP PULSE WIDTH SETTINGS

The table below shows minimum step and direction pulse width requirements for actively driven vs. open collector pulse output architectures at different controller cable lengths (10 ft. and 55 ft. Teknic cables). This data applies to Step and Direction (SD models).

Minimum Pulse Width Settings for Step/Dir and Pulse Burst Positioning

	Cable Length *(Teknic Cable Part Number)*			
	10 ft. (*CPMT-CABLE-CTRL-YM120)*		**55 ft.** (*CPMT-CABLE-CTRL-YY660)*	
Output Type	Minimum pulse width (time high)	Minimum pulse width (time low)	Minimum pulse width (time high)	Minimum pulse width (time low)
Totem-pole[1], 5V (actively driven)	750nS	750nS	750nS	750nS
Open collector, 249Ω pull-up to 5V	750nS	750nS	1,000nS	1,000nS
Open collector, 1kΩ pull-up to 5V	750nS	750nS	1,200nS	1,200nS
Open collector, 5V, no pull-up[2]	900nS	900nS	1,700nS	1,700nS

1. Values based on driver chip P/N U74HC14.
2. Not recommended. Use a pull-up resistor for best performance.
3. Open collector signals >5VDC should be evaluated for minimum stable pulse width settings.

STEP INPUT TIMING PROBLEMS

If ClearPath detects a problem with the incoming step/pulse stream (e.g. electrical noise, narrow pulses, pulses sent at excessively high frequency, etc.), it will execute a safety shutdown and alert the user with 1) an LED blink code at the motor, and 2) an exception/alert message viewable in MSP software as a **Step Timing Error**.

Application Note

All three ClearPath digital inputs are optically isolated and highly noise immune when used as recommended. ClearPath firmware was designed to detect, and alert the user to problems related to step and direction signaling.

COMMON CAUSES OF STEP TIMING ERRORS

Low voltage and/or low current from the controller. If the controller is outputting less than 4VDC and/or less than 8mA, it may be unable to reliably switch the ClearPath motor's inputs.

Pull-up resistor not installed or installed incorrectly. If your controller has open collector outputs, be sure to install the recommended pull-up resistors (at the controller end) as specified in the ClearPath Inputs section.

Step pulses from the controller are out of spec. Problems can occur if the controller's step pulse frequency is higher than the ClearPath specification, or if the minimum step pulse time is less than 750 nS. **Note:** Pulse width and frequency settings are often configurable in the controller.

Signal pairs were not run from motor to controller. Always run two wires for each ClearPath I/O signal (e.g. Step+ & Step-) all the way from the ClearPath motor to the controller's outputs. *Avoid jumping or otherwise combining wires at the motor connector. For example, do not combine all of the return wires (i.e. Step-, Dir-, Enable-) together at the motor and run a single wire from the motor to the controller.* If your controller doesn't have enough connection points, always opt to *combine connections at the controller side.*

QUADRATURE INPUT

Available on
SDSK + SDHP

MODE DESCRIPTION

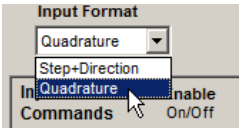

You send 2-channel quadrature signals and ClearPath moves in response. This mode is great for replacing quadrature driven stepper systems.

To get started, select "Quadrature" from the Input Format drop down menu in the Mode Controls section.

Assert the Enable Input to energize the motor. Then, send quadrature pulses from an external controller to ClearPath Inputs A and B.

Stepper Replacement **Quadrature Signal Control**

Signal	Function	Input Type	Example Timing
Input A	Speed & Dir	Pulse: Quadrature A	
Input B	Speed & Dir	Pulse: Quadrature B	
Enable	Enable	Logic: High=Enable Low=Disable	
Trigger	NA	NA	

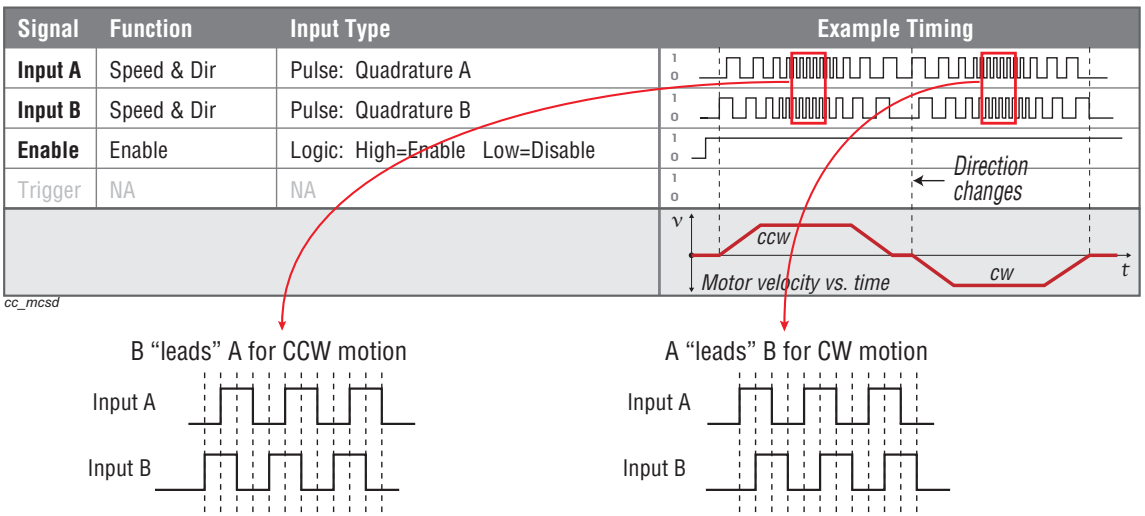

Step and Direction Inputs and Timing

I/O FUNCTIONS

Enable Input - Asserting this input energizes the motor shaft.

Input A - Quadrature A input.

Input B - Quadrature B input.

Output (HLFB) - See HLFB section for available modes.

Notes:

- Input B must lead Input A for CCW motion; Input A must lead Input B for CW motion.
- Maximum pulse input frequency = 667 kHz per channel **at 50% duty cycle.**
- Minimum pulse width (for high and low states) = 750 nS.
- Minimum time between adjacent channel transitions = 25 nS.
- Time before Disable = 10 mS.

MODE CONTROLS

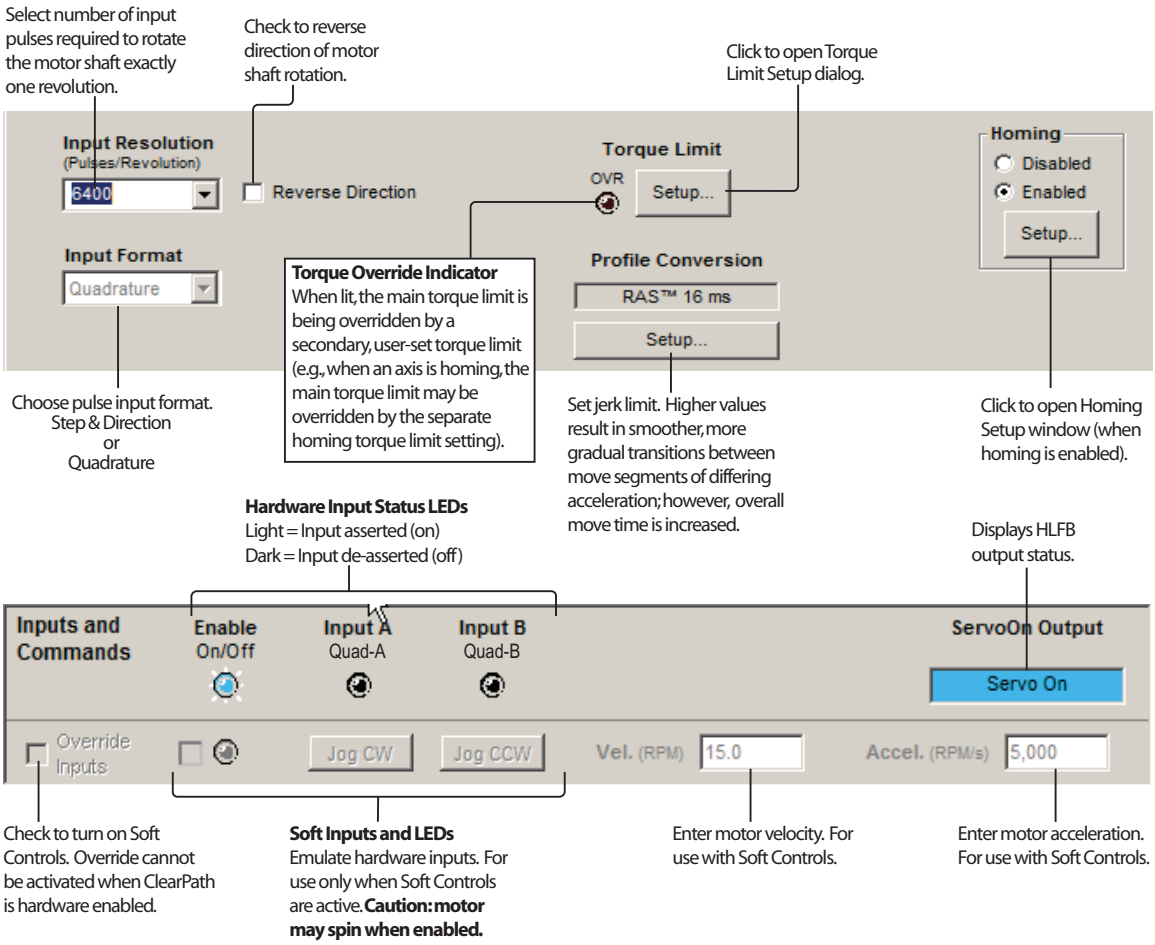

INPUT RESOLUTION SETTING

The Input Resolution setting provides a simple way to change the ratio of quadrature counts input to encoder counts moved.

Example 1) For a motor with a 6400 count/revolution encoder, setting the Input Resolution to **6400 quadrature counts/rev. results in a 1:1 relationship.** This just means that for each quadrature count seen at the ClearPath input, the motor shaft will rotate exactly 1 encoder count.

Example 2) For the same 6400 count motor, a setting of **800 quadrature counts per rev. results in a 1:8 relationship**. Thus, 1 quadrature count seen at the input will result in 8 encoder counts of motion at the shaft.

Available Input Resolution Settings

"R" Motors: 200, 250, 400, 500, 600, 700, 800, 1000, 1600, 1800, 2000, 3200, 3600, 4000, 6400, 7200, 8000, 12800, 25600, 32000, 51200, 64000 counts per revolution.

"E" Motors: Same as "R" motors, *plus* you can specify any integer value > 200.

APPENDIX A: TROUBLESHOOTING

LED BLINK CODES

Note: Some LED blink patterns indicate multiple possible exceptions, as shown in the table below. To identify the specific exception, connect ClearPath to a PC running MSP and view the detailed exception description.

LED Code	Exception Type	Affect on Motion	Servo Status	How to Clear Exception	Status or Exception Message Reported in UI
No LED Activity	N/A	N/A	Servo off	N/A	No (or low) Power Verify power is correctly wired and within specified voltage range.
Yellow – on solid	N/A	N/A	Servo off	N/A	Status: Disabled Motor power is turned off.
Yellow - flicker	N/A	N/A	Servo on	N/A	Status: Performing Commutation Start-up
Green - flicker	N/A	N/A	Servo on	N/A	Status: Enabled Motor power is on. ClearPath will respond to motion commands.
Yellow - 2 blinks	Shutdown	Disallows motion	Servo off	Toggle Enable input	User Stop ESC key or button was pressed by the user.
Yellow - 2 blinks	Shutdown	Disallows motion	Servo off	Toggle Enable input	Motor Enable Conflict The hardware inputs did not match the active software override inputs when the motor was enabled via the hardware enable line.
Yellow - 3 blinks	Shutdown	Disallows motion	Servo off	Toggle Enable input	Max Bus Voltage Exceeded Probable cause: large regenerated voltage upon deceleration or high AC line voltage. Enable the Vector Regen Shunt (VRS) under the advanced menu as a possible remedy.
Yellow - 3 blinks	Shutdown	Disallows motion	Servo off	Toggle Enable input	Power Event Detected Probable cause: Dropped AC phase; Bus volts under operating voltage.
Yellow - 3 blinks	Shutdown	Disallows motion	Servo off	Toggle Enable input	Bus Under Operating Voltage Possible causes: Brown out, power supply undersized, Minimum Operating Bus Voltage set too high (this setting is in MSP under Advanced>Power and Temperature
Yellow - 4 blinks	Shutdown	Disallows motion	Servo off	Toggle Enable input	Command Speed Too High Probable cause: commanded speed/velocity is beyond motor spec.
Yellow - 4 blinks	Shutdown	Disallows motion	Servo off	Toggle Enable input	Tracking Error Limit Exceeded Possible causes: excessive friction, mechanical misalignment, vel/accel too high, low DC bus voltage.

Yellow - 4 blinks	Shutdown	Disallows motion	Servo off	Toggle Enable input	RMS Torque Limit Exceeded Possible causes: excessive friction, mechanical misalignment, duty cycle too high, undersized motor.
Yellow - 4 blinks	Shutdown	Disallows motion	Servo off	Toggle Enable input	Excessive Bus Current Probable cause: bad tuning, low bus voltage.
Yellow - 5 blinks	Shutdown	Disallows motion	Servo off	Toggle Enable input	Excessive Motor Temp Possible causes: ambient temperature too high for motor load, poor cooling, fan failure (if used), maximum temperature setting too low (this setting can be found under Advanced>Power and Temperature.
Yellow – 6 blinks	Shutdown	Disallows motion	Servo off	Toggle Enable input	Momentary Low Bus Voltage Power supply drooped below 10V, insufficient current capabilities, and/impedance too high.
Yellow - 7 blinks	Shutdown	Disallows motion	Servo off	Toggle Enable input	Old Config File Version Probable cause: Firmware updated after config file was saved. Create or load new config file.
Yellow - 7 blinks	Shutdown	Disallows motion	Servo off	Toggle Enable input	Motor Phase Overload Phase current is beyond allowed ADC limit. Probable cause: incorrect tuning or wrong config file.
Yellow - 7 blinks	Shutdown	Disallows motion	Servo off	Toggle Enable input	Hard Stop Gave Way A mechanical hard stop was detected during homing but it gave way before homing was completed.
Yellow - 7 blinks	Shutdown	Disallows motion	Servo off	Toggle Enable input	Excessive Bus Current Probable cause: bad tuning, low bus voltage.
Yellow - 7 blinks	Shutdown	Disallows motion	Servo off	Toggle Enable input	Commutation Startup Error DC bus too low for proper commutation start-up. Possible causes: brown out, incorrect power supply voltage, supply configured for higher AC line voltage.
Yellow - strobe	Shutdown	Disallows motion	Servo off	Toggle Enable input	Velocity Set Too High Velocity/speed limit exceeds motor's factory-set maximum speed.
Yellow - strobe	Shutdown	Disallows motion	Servo off	Toggle Enable input	RAS Change Rejected Unexpected error. Contact Teknic for work-around or new firmware.
Yellow - strobe	Shutdown	Disallows motion	Servo off	Toggle Enable input	Step Input Timing Error Possible causes: Step input pulse width too short, electrical noise, loose or shorted wires. A pull-up resistor may be required. Read Step Timing section of user manual for details.

Yellow - strobe	Shutdown	Disallows motion	Servo off	Toggle Enable input	Speed Too High For RAS Unexpected error. Contact Teknic for work-around or new firmware.
Yellow - strobe	Shutdown	Disallows motion	Servo off	Toggle Enable input	MagAlign Distance Error Distance traveled does not match expected value. Possible cause: motor against an end stop, incorrect motor settings.
Yellow - strobe	Shutdown	Disallows motion	Servo off	Toggle Enable input	MagAlign Direction Error Direction traveled is incorrect. Probable cause: external forces during MagAlign procedure.
Yellow - strobe	Shutdown	Disallows motion	Servo off	Toggle Enable input	DSP Watchdog Restart Firmware problem. Re-flash firmware with same or newer firmware version. Return unit to Teknic if problem not solved.
Green/Yellow alternating	Lockdown	Disallows motion	Servo on	Toggle Enable input	Travel Limits Violated (lockdown) Commanded position is on the wrong side of the home position.
Green/Yellow alternating	Lockdown	Disallows motion	Servo on	Toggle Enable input	Travel Limits Violated (lockdown) Commanded position is beyond the Max Travel from Home position as specified in Homing Setup.
Green/Yellow alternating	Lockdown	Disallows motion	Servo on	Toggle Enable input	Motor Enable Conflict The hardware inputs did not match the active software override inputs when the motor was enabled via the hardware enable line.
Green – 2 blinks	Warning	Allows motion (if cause is no longer present)	Servo on	Auto-clears at start of next move if cause is no longer present	Travel Limits Violated (warning) Commanded position is on the wrong side of the home position.
Green – 2 blinks	Warning	Allows motion (if cause is no longer present)	Servo on	Auto-clears at start of next move if cause is no longer present	Travel Limits Violated (warning) Commanded position is beyond the Max Travel from Home position as specified in Homing Setup.
Green – 2 blinks	Warning	Allows motion (if cause is no longer present)	Servo on	Auto-clears at start of next move if cause is no longer present	Move Buffer Underrun Possible causes: move increments too small or sent too slowly.
Green - 3 blinks	Alert	Allows motion	Servo on	Auto-clears when cause is no longer present	Torque Saturation Power supply may be insufficient for application, torque Limit may be set too low for command. Try lowering acceleration.
Green - 3 blinks	Alert	Allows motion	Servo on	Auto-clears when cause is no longer present	Voltage Saturation Available torque is limited by DC bus voltage. Commanded speed may exceed motor spec. Try lowering speed or using a higher voltage power source (if possible).

Green - 3 blinks	Alert	Allows motion	Servo on	Auto-clears when cause is no longer present	Over Speed Commanded speed exceeds motor max speed limit. Try lowering speed.
Green - 3 blinks	Alert	Allows motion	Servo on	Auto-clears when cause is no longer present	Over Temp Internal electronics above shutdown threshold. Add fan.
Red Toggle	Motor Failure	Disallows Motion	Servo off	Not clearable	Motor Has Failed Return to Teknic for repair or replacement.

APPENDIX B: MECHANICAL REFERENCE

DIMENSIONED DRAWINGS

Note: all links on this page point to teknic.com.

MOTOR

ClearPath-MC/SD Motor, NEMA 17 Frame

POWER DISTRIBUTION BOARDS

POWER4-HUB-S

POWER4-STRIP-S

MOTOR MOUNTING CONSIDERATIONS

Tip: Teknic recommends mounting the motor such that the USB communication port and status LED are visible and accessible when the motor is mounted to the machine.

- **Do not** mount ClearPath over a heat source such as a power supply, spindle drive, etc. ClearPath will automatically shut down if its internal temperature exceeds specifications.
- **Do not** mount ClearPath in an unventilated enclosure.
- ClearPath can be fitted with an external accessory fan if desired. See ***Fan Mounting and Cooling*** later in this section for details.

CONNECTING CLEARPATH TO A MECHANICAL SYSTEM

While it's obvious that ClearPath must be connected to a mechanical system to do useful work, it's not always clear just how to connect the motor to the mechanics.

Problems arise when a connecting element (such as a coupling) slips, exhibits excessive backlash, or can not accommodate typical shaft-to-shaft misalignments. Ultimately, the choice of shaft interface or coupling depends on the application, whether a precision positioning stage or a low speed conveyor.

The shaft interface (coupling, pulley, pinion, etc.) must be securely clamped to the shaft with minimum backlash (ideally none). This primary mechanical interface is critical in achieving and maintaining the best possible performance from a servo motion system.

MOTOR CONNECTION: GENERAL TIPS AND GUIDELINES

This section contains information and tips on how to safely and securely couple a motor to a mechanical system.

For more information on this topic, visit the Teknic website:
https://teknic.com/securing-mechanics-motor-shafts/

- **Align with care.** When connecting two shafts—such as a motor shaft to a screw shaft—the rotating centers must be carefully aligned in both the angular and offset sense (including offsets/adjustments for thermal growth) to achieve the best possible motion quality and longest motor/bearing life.

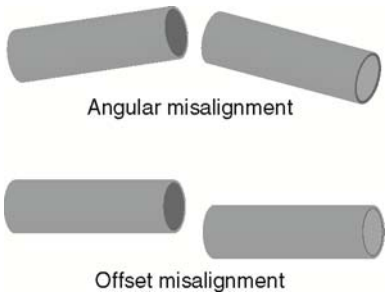

Some couplings are more forgiving of misalignment than others, but in general, misalignment will cause undesired vibration/noise, shortened bearing life, and even broken motor shafts.

- **Use lightweight components when possible.** Aluminum couplings, pinions, and pulleys add significantly less inertia to the motion system than steel parts of the same size. In most applications, lower inertia is preferable because it allows the motor (and attached mechanics) to accelerate harder and move and settle faster.
- **Avoid using set screws.** Coupling devices with set screws are prone to failure and often become the weak link when joining a motor to a load. Set screws deform the metal around the screw's point of contact, often resulting in a raised bur on the shaft that can make it hard to remove and replace the coupling element. Set screws also tend to slip and score the shaft.
- **Tip:** Couplings, pulleys and pinions with circumferential clamping mechanisms tend not to damage motor shaft, hold better, and are easier to replace than those that use set screws.
- **Clamp close to the motor.** For maximum performance, secure pulleys and pinions as close to the motor face as is practical. This effectively reduces the lever arm (and associated bearing load) for applications with a side load.
- **Don't over-tension belts.** Always read the belt manufacturer's guidelines for proper belt tension, but never exceed the ClearPath specification for maximum side load. Overly tight belts put undue stress on the motor shaft and bearing systems that can result in premature bearing and shaft failure.

NOTES ON COUPLING SELECTION

A complete coverage of the topic *Coupling Selection for Servo Applications* is beyond the scope of this document, but many articles and resources can be found on the web for those interested in learning more. Because there are so many different coupling styles and applications, selecting the "right" coupling for a particular application can be challenging.

For more information on this topic, visit the Teknic website:
https://teknic.com/securing-mechanics-motor-shafts/

General Guidelines for Coupling Selection

Teknic has a few guiding principles when it comes to coupling selection for servo applications. Keep in mind that these are rules of thumb and may not apply to every application. In general:

- **Don't** undersize the coupling. Understand how much torque your application requires and stay within the coupling manufacturers specifications. Always leave reasonable engineering margin.
- **Don't** use set screw type couplings. They damage the motor shaft and tend to be less reliable over time than clamp style couplings.
- **Do** use clamp style couplings. These clamp around the circumference of the shaft at one or two points without deforming the shaft surface.
- **Don't** use rigid couplings—they are notoriously intolerant of misalignments.
- **Don't** use beam style (helical) couplings if vibration damping or torsional stiffness is critical to your application. Beam couplings tend to resonate/whine at higher speeds.
- **Don't** use any coupling that requires you to drill into, deform, or "pin" the motor shaft.

Coupling Recommendation

Teknic often recommends **zero-backlash curved jaw couplings** (commonly referred to as "spider couplings") as a good choice for many servo applications. These couplings are moderately priced and widely available from well established manufacturers such as Ruland.



Couplings for servo applications

Note: Curved jaw couplings (also known as spider couplings) are a good choice for many applications, but cannot tolerate a great deal of

misalignment or axial motion. Also, never exceed the manufacturer's rating for "maximum torque with zero backlash" when using jaw couplings.

Bellows couplings are also excellent for high precision positioning applications. Bellows couplings allow for more misalignment than jaw couplings but are generally more expensive.

Both curved jaw and bellows coupling offer excellent positioning accuracy, high speed performance, and vibration damping when installed and operated within the manufacturer's specifications and guidelines.

Coupling Information on the Web

Ruland's website has a good collection of technical information on coupling types and coupling selection for servo systems. See links below.

https://www.ruland.com/technical-resources/technical-articles

https://www.ruland.com/technical-resources/technical-articles/5-reasons-to-consider-using-jaw-couplings

INSTALLING PULLEYS AND PINIONS

PULLEY AND PINION MOUNTING

- Always follow the manufacturers mounting guidelines.
- Mount pulleys and pinions as close to the motor face as possible while still following the manufacturer's installation guidelines.
- Never drill through, "pin", or deform the motor shaft when mounting a pulley or pinion.

Application Tip: To prevent loosening/slip, some users bond their pulleys and pinions to the motor shaft with a high strength adhesive such as Loctite #638. While this is very effective in preventing pulley slip, it can be difficult to undo once the adhesive has cured.

ABOUT END-OF-TRAVEL STOPS

End-of-travel stops are typically installed to prevent the moving element of a linear axis from flying off the machine in the event of a use or control error. There are a few common types of end stop to consider, but the final choice depends on the application objectives and requirements.

HARD BLOCKS

This is usually a solid block of steel, aluminum, or hard plastic secured at one or both ends of travel and positioned in such a way as to make even, repeatable contact with a hard surface on the moving element. Hard blocks are very effective at arresting motion, but can result in mechanical damage when struck at high speeds.

In several modes, ClearPath must home to a hard stop to establish a home reference position before functional positioning can begin.

ELASTOMERIC (RUBBER) STOPS

High durometer rubber stops (hard rubber) can also be used with applications that use Hard Stop Homing. This type of end stop offers a higher level of shock absorption and axis protection than hard blocks. Spongy, low durometer rubber stops are not recommended in most cases. They offer little benefit over a hard end stop during an axis crash.

PNEUMATIC (DASHPOTS)

Pneumatic hard stops (dashpots) offer excellent shock absorption performance but are considerably more expensive than hard blocks. Examples of specialized dashpots include the hydraulic cylinder in an automobile shock absorber as well as many automatic door closers.

END STOPS AND HARD STOP HOMING

End stops from medium durometer rubber to steel can be used successfully with Hard Stop Homing. When selecting end stops for a Hard Stop Homing application consider the following:

- Axes with low friction that are easily back driven can tolerate “softer” rubber end stops and still achieve good homing performance.
- Higher friction applications and those that cannot be back driven will generally require harder end stop material to achieve best Hard Stop Homing performance.
- Be prepared to test and experiment with different end block materials to ensure proper homing operation with your mechanical system.

FAN MOUNTING

ClearPath motors include unthreaded mounting bosses on the rear housing for attaching a standard 40 mm cooling fan. Secure the fan using #6 or M3.5 thread-cutting screws.

Note: Accessory fans are optional and available from electronics suppliers such as DigiKey and Mouser. Fans require an external power source, typically 12 or 24 VDC.

Note: As with most electronic products, *cooler is better*. So, even though ClearPath can reliably operate at elevated temperatures, keep motor thermal considerations in mind when designing a ClearPath system.

Note: ClearPath will shut down protectively if the internal temperature reaches approximately 83 degrees C.

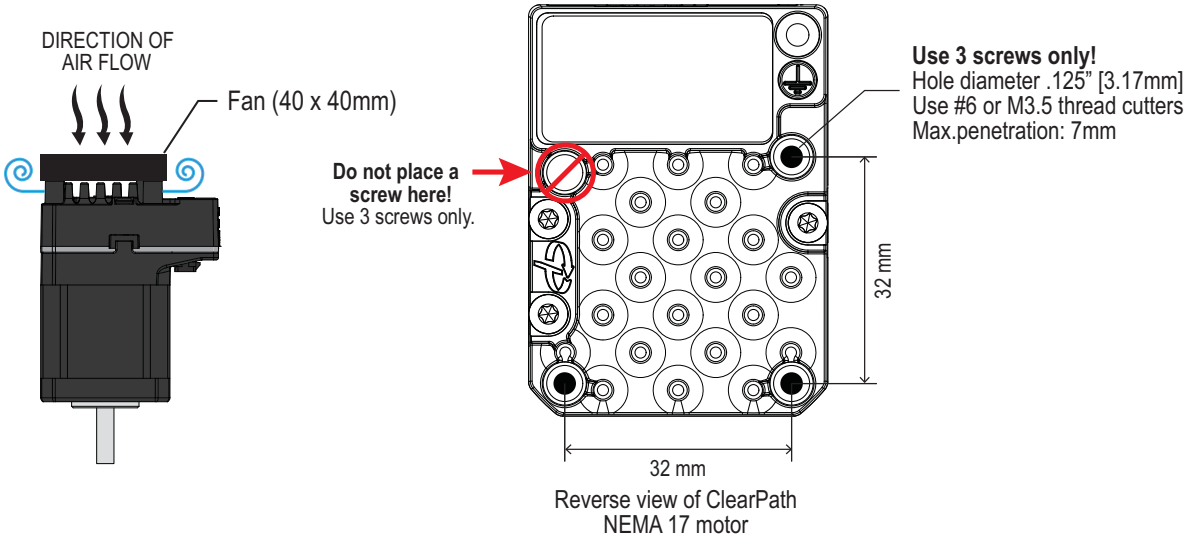

Reverse view of ClearPath NEMA 17 motor

APPENDIX C: CONNECTOR AND CABLE REFERENCE

This section contains part numbers for ClearPath-SD mating connectors, terminals, and tools .

MATING CONNECTORS: CLEARPATH-SD, NEMA 17 MODEL

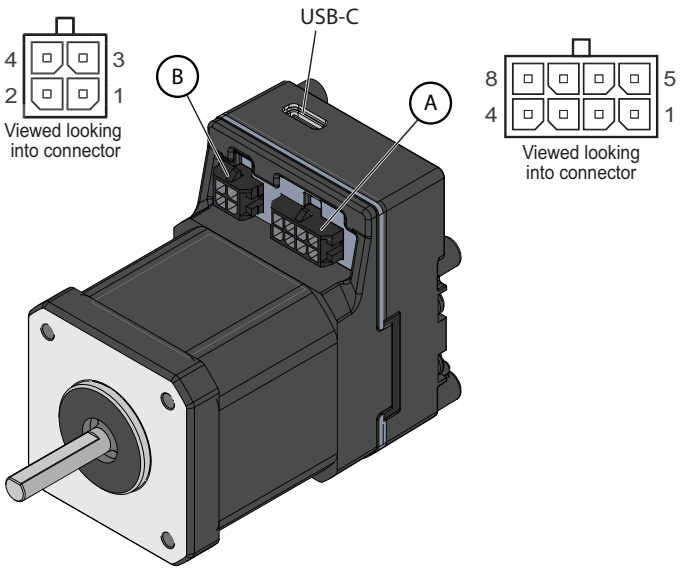

For complete specifications and application information, visit www.molex.com

Ref.	Desc.	Mating Connector PN	Terminal PN	Terminal Desc.	Crimp Tool	Extraction Tool	Wire Gauge[1]
A	Molex Micro-Fit 3.0 Receptacle, 8 circuits	Molex/ 0430250800	Molex/ 0430300001	Female crimp terminal, tin plate, 20-24 AWG	Molex/ 638190000 (20-30 AWG)	Molex/ 11030043	24 AWG
B	Molex Micro-Fit 3.0, Receptacle, 4 circuits	Molex/ 0430250408	Molex/ 0430300001	Female crimp terminal, tin plate, 20-24 AWG	Molex/ 638190000 (20-30 AWG)	Molex/ 11030043	2x24 AWG (Pins 1,4)
			Molex/ 0430300038	Female crimp terminal, tin plate, (18 AWG)	Molex/ 0638280200 (18 AWG)		2x18 AWG (Pins 2,3)
C	*N/A for this model*						

[1]AWG values listed are the actual w ire gauges used in Teknic-manufactured cables.

MATING CONNECTORS: POWER DISTRIBUTION BOARDS

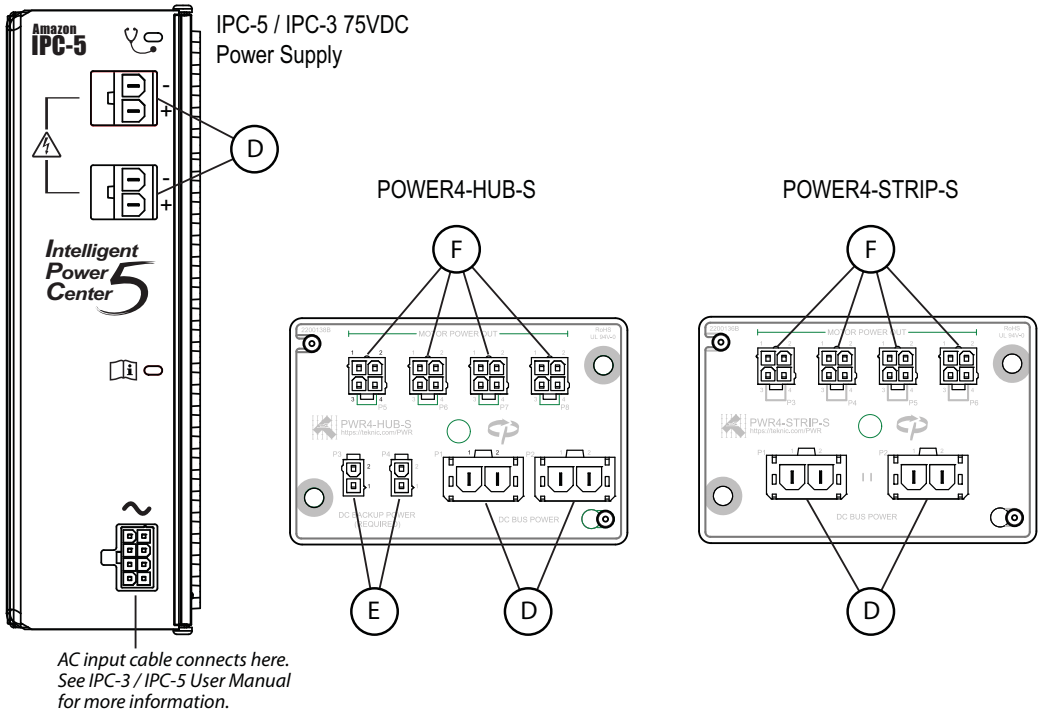

For complete specifications and application information, visit www.molex.com

Ref.	Desc.	Mating Connector PN	Terminal PN	Terminal Description	Crimp Tool	Extraction Tool	Wire Gauge[1]
D	Molex Sabre, Receptacle, 2 circuits	Molex/ 44441-1002 (natural, UL 94V-2) 44441-2002 (black, UL 94V-0)	Molex/ 43375-0001	Female crimp terminal, tin plate, 14-16 AWG	Molex/ 638117200 (14-16 AWG)	63813-2700	16 AWG
E	Molex MiniFit-Jr, Receptacle, 2 circuits	Molex/ 39-01-2020 (natural, UL 94V-2) 39-01-3025 (black, UL 94V-2) 39-01-3028 (natural, UL 94V-0) 39-03-9022 (black, UL 94V-0)	Molex/ 39-00-0059 (reel) 39-00-0060 (loose)	Female crimp terminal, tin plate, 18-24 AWG	Molex/ 638190901 (18-24 AWG)	11-03-0044	20 AWG
F	Molex MiniFit-Jr, Receptacle, 4 circuits	Molex/ 39-01-2040 (natural, UL 94V-2) 39-01-3045 (black, UL 94V-2) 39-01-2045 (natural, UL 94V-0) 39-03-9042 (black, UL 94V-0)	Molex/ 39-00-0059 (reel) 39-00-0060 (loose)	Female crimp terminal, tin plate, 18-24 AWG	Molex/ 638190901 (18-24 AWG)	11-03-0044	18 AWG (Pins 2,3) 24 AWG (Pins 1,4)

[1]AWG values listed are the actual wire gauges used in Teknic-manufactured cables.

CABLE DRAWINGS

Note: all links below point to teknic.com.

POWER CABLES

CPMT-CABLE-PWR-YM120

ClearPath NEMA 17 Motor Power Cable. Molex Mini-Fit Jr. 4-position to Molex Micro-Fit 3.0 4-position, 10ft [3.05m]

CPMT-CABLE-PWR-YY660

ClearPath NEMA 17 Motor Power Cable. Molex Micro-Fit 3.0 4-position to Molex Micro-Fit 3.0 4-position, 55ft [16.8m]

PC-SBR-72

DC Bus Power Cable. IPC-3 or IPC-5 to Power4 products, 6ft [1.8m]

CPM-CABLE-M2P2P-120

2-Position Low Voltage Power Cable. Molex Mini-Fit Jr. 2 to Molex Mini-Fit Jr. 2, 10ft [3.05m]

CONTROL CABLES

CPMT-CABLE-CTRL-YM120

ClearPath NEMA 17 Control Cable. Molex Mini-Fit Jr. 8-position to Molex Micro-Fit 3.0 8-position, 10ft [3.05m]

CPMT-CABLE-CTRL-YY660

ClearPath NEMA 17 Control Cable. Molex Micro-Fit 3.0 8-position to Molex Micro-Fit 3.0 8-position, 55ft [16.8m]

APPENDIX D: SPECIFICATIONS

CLEARPATH-SD NEMA-17 MOTOR

Electrical Power Requirements: DC Bus Supply		#
	Bus Supply Voltage, Typical	12-75VDC
	Bus Supply Voltage, Absolute Min	7 VDC (as measured at input terminals)
	Bus Supply Voltage, Absolute Max	90VDC (as measured at input terminals)
	Continuous Bus Current, Typical	1A to 4A (application dependent)
	Continuous Bus Current, Maximum	10A
	Disabled Power, Maximum	100mW
	Enabled Power @ 75V	3W
Electrical Power Requirements: Logic Power Backup Supply		
	Supply Voltage, Typical	12-75 VDC (full range); 12-42 VDC (touch-safe range)
	Supply Voltage, Absolute Min	10 VDC (as measured at input terminals)
	Supply Voltage, Absolute Max	90 VDC (as measured at input terminals)
	Continuous Power, Typical	3W
	Continuous Power, Maximum	4W
Electrical I/O		
	Control Signal Voltage Range	4-28VDC (5-24VDC typical)
	Input Current @ 5V	7.5mA (min.)
	Input Current @ 28V	12.0mA (min.)
	HLFB Absolute Maximum Voltage	30VDC (across output terminals)
	HLFB Output Current, Maximum	9mA (non-inductive load)
	HLFB Output voltage drop @ 2mA	0.30VDC (+/- 100mV)
	HLFB Output voltage drop @ 5mA	0.55VDC (+/- 100mV)
Motor Bearings		
	Maximum Radial Load:	5mm shaft:25 lbs 8mm shaft:35 lbs
	L10 Bearing Life (radial load located at end of shaft)	5mm: 1.18x10^10 revs 8mm: 3.41x10^9 revs
	Maximum Thrust Load:	6 lbs
Environmental		
	Operational Ambient Temperature[1]	-40°C to +70°C
	Storage Temperature	-40°C to +70°C
	Maximum Body Temp.	125°C
	Maximum Rear Cover Temp.	125°C
	Humidity:	0-85% non-condensing
	Recommended Optional Fan, NEMA 17	40mm square, 45.25 mm bolt center, >= 5 CFM
Physical		
	Weight	16 oz. [0.454 kg]
	Dimensions	See dimensional drawing
Environmental Sealing		
	Motor	IP50
Compliance		
	Regulatory Certifications: UL, CE	Pending

Country of Origin	USA
Warranty	3 years

[1] The RMS torque limit on motors is derated for operation in ambient temperatures above +40°C. Contact Teknic for derating assistance.

POWER4-HUB-S

DC Bus Power (Input from DC bus supply)		
	Nominal voltage range	12-75VDC
	Max. input voltage	90VDC
	Max. continuous current	20A
	Peak current (3 seconds)	50A
	Connectors	2-pin Molex Sabre (x2)
Logic Backup Power (Input from Logic Backup Power Supply)		
	Nominal voltage range	12-75VDC, (12-42VDC touch-safe range)
	Max. input voltage	100 VDC
	Max. continuous current	10A
	Max. peak current	10A
	Connectors	2-pin Molex MiniFit Jr. (x2)
DC Bus Power (Output to ClearPath motors)		
	Max. motors	4
	Connectors	4-pin Molex MiniFit Jr. (x4)
Dielectric Withstand Voltage		
	Between DC Bus and Backup Power	1,600 VDC
	Between DC Bus and chassis plate	1,600 VDC
	Between Backup Power and chassis plate	1,600 VDC
Environmental		
	Operating temperature**	-40°C to +70°C
	Long term storage temperature	-40°C to +50°C
	Pollution Degree	2
Dimensions		
	L x W x H (w/o baseplate)	3.37" x 2.23" x 0.67"
	L x W x H (with baseplate)	3.62" x 2.35" x 1.03"
Country of Origin		USA
Warranty		1 year

POWER4-STRIP-S

DC Bus Power (Input from DC bus supply)		
	Nominal voltage range	12 - 75VDC
	Max. input voltage	90VDC
	Max. continuous current	20A
	Peak current (3 seconds)	50A
	Connectors	2-pin Molex Sabre (x2)
DC Bus Power (Output to ClearPath motors)		
	Max. motors	4
	Max. continuous current	10A
	Peak current (3 seconds)	20A
	Connectors	4-pin Molex MiniFit Jr. (x4)
Environmental		
	Operating temperature	-40°C to +70°C
	Long term storage temperature	-40°C to +50°C
	Pollution Degree	2
Dielectric Withstand Voltage		
	Between DC Bus and chassis plate	1,600 VDC
Dimensions		
	L x W x H (w/o baseplate)	3.37" x 2.23" x 0.67"
	L x W x H (with baseplate)	3.62" x 2.35" x 1.03"
Country of Origin		USA
Warranty		1 year

APPENDIX E: GROUNDING AND SHIELDING

PROTECTIVE EARTH (PE) CONNECTION

Compliance Note: ClearPath must be properly connected to the machine's Protective Earth terminal to meet EMC emissions specification EN-61000-6-4, and EMC immunity specification EN-61000-6-2, as well as EMC electrical safety specification EN-61010 (for CE/UL compliance).

Connect ClearPath to your machine's Protective Earth terminal (PE) using one of the following methods.

- **If the motor mounting plate is bonded to machine PE (typical),** most of the work is already done. Simply secure ClearPath to the mounting plate with conductive fasteners (avoid anodized or coated hardware). Ensure direct, bare metal-to-metal contact between the ClearPath motor face and mounting surface.
- **If the motor mounting plate *is not* bonded to machine PE** it's still easy to make a good PE connection. Just install a grounding wire from ClearPath's Auxiliary PE Connection Point (located on the motor's rear casting) to a point on the machine that is bonded to machine PE. **Use #6-32, thread forming screw, 5/16" length** (McMaster-Carr PN 93878A145). Use grounding wire with same AWG number (or heavier) as the ClearPath DC power input wiring.

Note: In scenarios where ClearPath *is not* connected to a PE (Protective Earth) return path–such as during bench testing or maintenance–temporary grounding measures may be necessary to comply with safety requirements.

GROUNDING AND SHIELDING

- Always maintain separation between isolated control ground and power ground.
- Shielded cable is not required for ClearPath control cables.
- If you choose to use shielded control cable, connect the cable's isolated ground at one point (at the controller only). Do not hook isolated control ground to the machine frame or chassis at any other location.
- Do not ground ClearPath I/O circuits to the machine frame or chassis.

Note: All ClearPath I/O signals are electrically isolated from ClearPath's DC power input and motor output circuits, as well as from the motor case. This design feature helps to ensure that control signals aren't compromised by induced currents from the motor, power supply, or internal PWM.

POWER RETURNS

- Never use the machine frame or chassis as a power return. Use discrete cable or wires for all power wiring.
- Use only recommended wire gauge for all ClearPath power wiring.

APPENDIX F: CLEARPATH PART KEY

Example Part Number

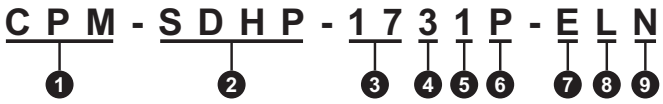

1	**Product ID**	**CPM**	ClearPath® Motor
2	**Family/Model**	**SDSK**	Step & Direction / Stepper Killer
		SDHP	Step & Direction / High Power
3	**Motor Frame Size**	**17**	NEMA 17 frame
4	**Body Length** *Approx. excludes shaft length*	**3**	74.5 mm
5	**Winding/Magnetic Structure**	**0**	Indicates specific winding design. See your motor's torque-speed curve for more information.
		1	
6	**Winding Type**	**P**	Parallel-Wye
7	**Enhanced Options**	**R**	Regular Positioning Resolution = 800 counts per revolution
		E	Enhanced Positioning Resolution = 6400 counts per revolution
8	**Shaft Diameter**	**L**	8 mm
		F	5 mm
9	**Shaft Seal**	**N**	Standard dust sealing

APPENDIX G: MISCELLANEOUS TOPICS

HOMING

INTRODUCTION

Why Home? In many positioning applications, the moving element of the stage (i.e., the load) must be precisely positioned at a known location along the stroke of the axis before accurate positioning can begin. This is where homing comes in.

When a ClearPath motor is powered up, the motor does not know exactly where its load is positioned along the stroke. Thus, if an application requires the load to be in a specific location before operations begin, the motor must be homed.

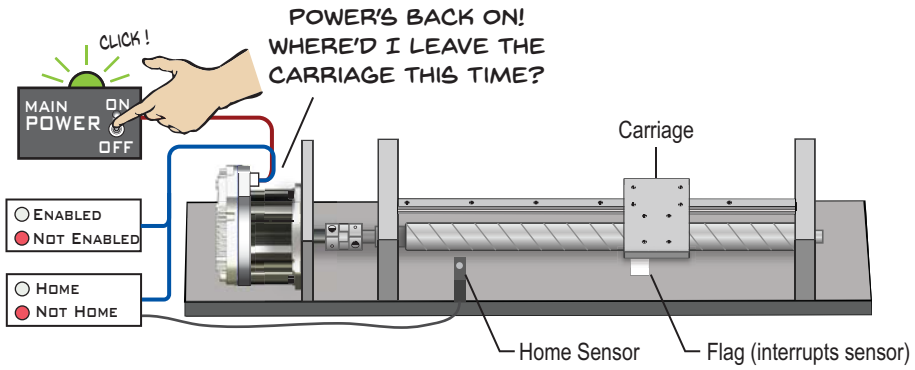

HOMING (OVERVIEW)

The homing process typically involves moving the motor in a predetermined direction towards a physical home location (typically a sensor or hardstop at the end of travel).

When the motor arrives at this location, the position is recorded, and the motor moves to a predefined offset location. Once at the offset position, the motor will begin to operate normally as defined by the currently selected operating mode.

This process ensures that an application will always begin in the same physical location regardless of the motor's position upon power-up.

TERMS USED IN THIS SECTION

Please read the below definitions to familiarize yourself with a few frequently used ClearPath homing terms.

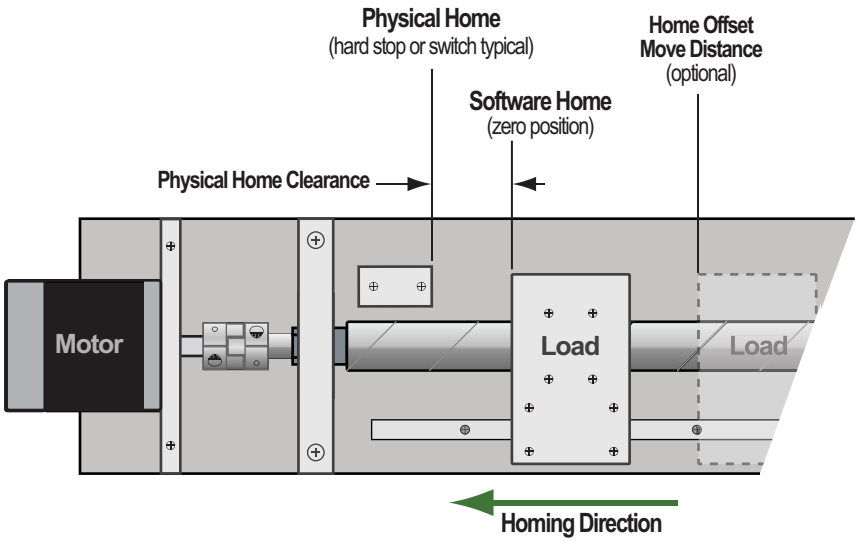

Physical Home - Physical Home is the position of a mechanical hardstop or home sensor. When the Physical Home is encountered, e.g. a homing switch is actuated, the position is recorded, and the ClearPath motor stops and moves away towards the final offset position.

Software Home (zero position) - During homing, once the Physical Home (sensor or hard stop) is detected, ClearPath's position counter is adjusted such that the Software Home (zero position) is a user defined distance from the Physical Home

Physical Home Clearance (setting) - This is the user-defined distance between Physical Home and Software Home (in encoder counts). Physical Home Clearance provides safety spacing between the load and Physical Home. The default setting is 1 motor revolution.

Home Offset Move Distance (setting) - This is an additional, user-defined parameter which determines the final offset location when homing is completed. At the end of homing the load will be the specified distance away from the Software Home.

HOMING SETTINGS

Homing dialog settings are explained below.

HOMING SETTINGS: COMMON TO ALL MODES

These homing settings are common to all ClearPath Automatic Homing setups. They tell ClearPath the basics of when, where, and how to home.

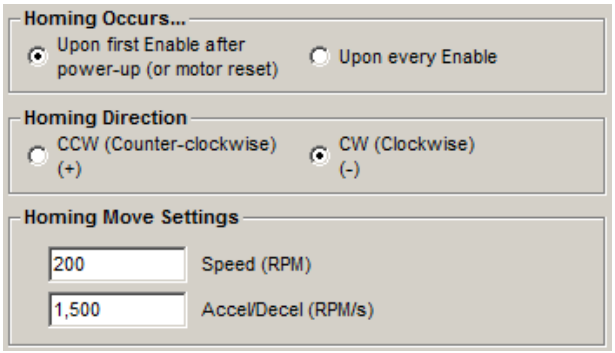

Homing Occurs...

Lets you specify when to home your axis, either 1) the first time ClearPath is enabled after power up (typical), or 2) every time ClearPath is enabled.

Application Note: If your ClearPath has Logic Power Back-up, *and* you select "Homing Upon first Enable after power-up", you must cycle both power sources (main DC and Logic Power) before homing will be allowed.

Homing Direction

Lets you choose clockwise or counter-clockwise shaft rotation during homing. Select the direction of motor shaft rotation that will move the load toward the Physical Home (hard stop, switch, sensor).

Homing Move Settings

Lets you specify homing speed and acceleration. **Caution:** always test homing operation at low speed and acceleration.

HOMING SETTINGS: OTHER

Homing Torque Limit (Hard Stop Homing only)

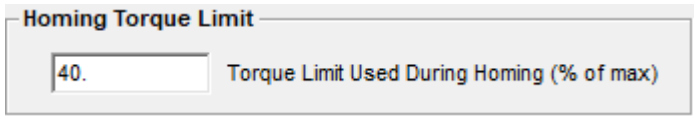

When homing is initiated, ClearPath lowers the torque limit to this value. The Main Torque Limit is automatically restored after homing is complete.

"Miscellaneous" Settings

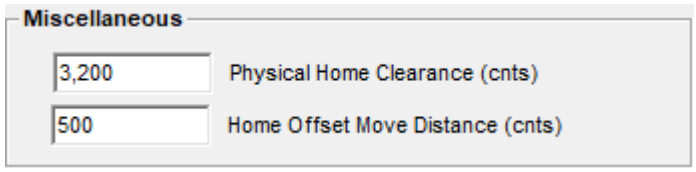

Physical Home Clearance (cnts) - This is the user-defined distance between Physical Home and Software Home (in encoder counts). It is intended to provide safety spacing between the load and Physical Home. Default setting is 1 motor revolution.

Home Offset Move Distance (cnts) - (Optional. Set to "0" to ignore.) This parameter determines the final position of the axis relative to the Software Home. If this parameter is set to zero, the motor will remain at the Software Home (zero) position when homing is complete.

Precision Homing

The Precision Homing feature was created to help ensure that ClearPath always finds the exact same Software Home (zero) position, even in cases where the hard stop or home switch has slipped, bent, or otherwise drifted in position. See the "Precision Homing" section later in this document for more information.

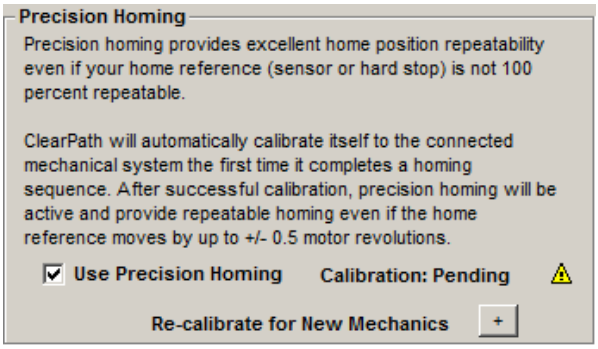

Precision Homing section of Homing Dialog

Shaft Angle Homing

This homing method was designed with a rotary axis in mind– a rotary tool changer for example. This method requires no additional sensor or end of travel hard stop to use.

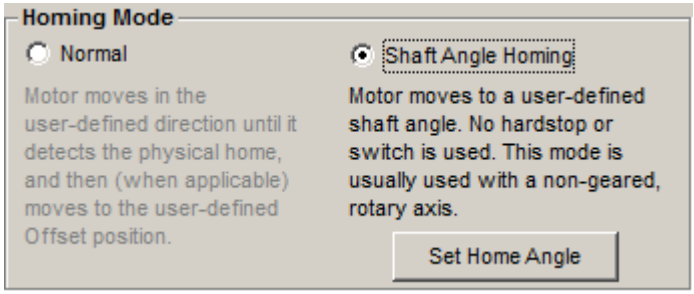

To use Shaft Angle Homing:

1. Select "Shaft Angle Homing" from the homing dialog (see image above).
2. Manually move the motor shaft to the desired position.
3. Click the "Set Home Angle" button to store the shaft angle in the motor's nonvolatile memory.

Note: On first power-up, the motor may move more than 1 revolution before reaching the desired shaft angle.

Manual Homing aka "User Seeks Home"

Manual Homing is available in Step & Direction and Pulse Burst Positioning modes only.

When using Manual Homing, the user is responsible for sending homing moves to ClearPath via step and direction or pulse burst signals.

To use this feature, select the **"User Seeks Home"** setting in the homing dialog of Step and Direction or Pulse Burst Positioning mode.

See typical homing sequences section for more information on manual hard stop homing.

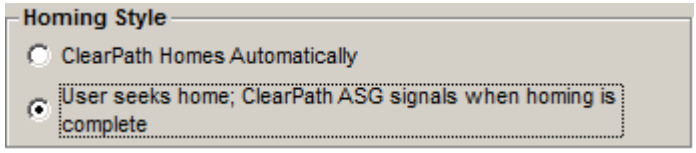

TYPICAL HOMING SEQUENCES

This section enumerates the main steps involved in the most common ClearPath homing scenarios.

For the sake of discussion, we will assume that the ClearPath motor described in this section is set to **home every time it is enabled** (as opposed to homing only the first time it is enabled after power up).

AUTOMATIC HARD STOP HOMING SEQUENCE

1. The user Enables ClearPath. (Enabling energizes the motor coils and puts ClearPath in Automatic Homing mode.)
2. ClearPath automatically moves the load toward Physical Home (a hard stop in this case) at the user-specified acceleration, speed, and direction.
3. The load hits the hard stop, triggering the Hard Stop Detection algorithm. Holding torque against the hard stop is automatically rolled back.
4. Physical Home is established. This then defines the Software Home(zero position) to be the Physical Home Clearance away from the Physical Home.
5. ClearPath moves away from the Physical Home to the offset location specified in the [Home Offset Move Distance] parameter. If this value is zero, ClearPath moves to the Software Home(zero position).
6. Homing is complete. ClearPath can now act on motion commands.

MANUAL HARD STOP HOMING SEQUENCE

1. The user Enables ClearPath. (Enabling energizes the motor coils and puts ClearPath in Manual Homing mode.)
2. The motor remains stationary until the user's control system issues a move toward the Physical Home (hard stop) using Step & Direction or Pulse Burst signals. *Note: This initial move must be long enough to guarantee the load will hit the hard stop from the farthest point away from the stop.*
3. The load hits the hard stop, triggering the Hard Stop Detection algorithm. Holding torque against the hard stop is automatically rolled back.
4. If the motor's HLFB output is set to "ASG", the output asserts.
5. ClearPath waits for the user's controller to send pulses to command motion *away* from the hard stop. Any further commands into the hardstop are disregarded while the motor is folding back torque.
6. Upon seeing the first step or pulse away from the hard stop ClearPath's position counter is automatically zeroed. ClearPath exits homing mode and is ready for further move commands.

PRECISION HOMING

Precision Homing helps assure that your specified home position remains highly repeatable over time, even if the physical home mechanism (typically a switch, sensor, or hard stop) takes a hit and shifts position, becomes bent, or experiences sensor drift over time. The physical home mechanism can move by as much as ± 1/2 of a motor revolution and not affect axis homing repeatability.

Video Link: Precision Homing Explained

When a ClearPath motor is set up for Precision Homing, the motor automatically calibrates itself to the connected mechanical system the first time ClearPath completes a homing operation (note: homing can be recalibrated very easily at any time). After successful calibration, Precision Homing remains active unless the feature is turned off in MSP.

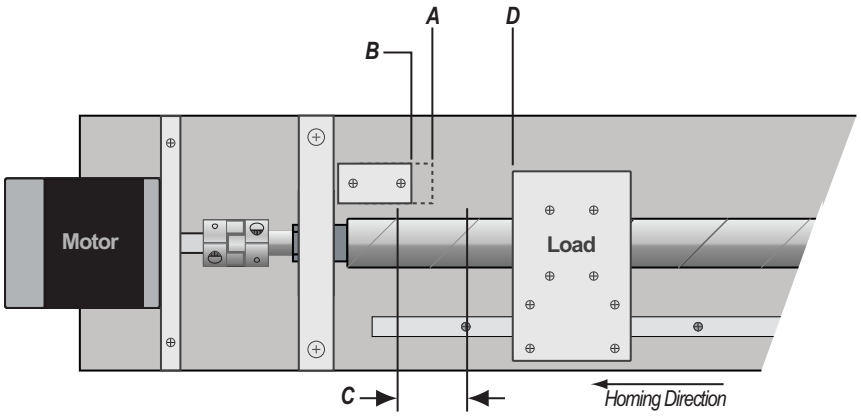

Precision Homing Nomenclature

(a) **Original Physical Home** - This is the Physical Home reference *point found during the initial homing/calibration* operation. Note: This reference position is stored in the motor's NV memory. It is not reset if power is cycled.

(b) **Current Physical Home** - This is the most recent Physical Home found. This position will only be different from Original Physical Home if the associated sensor or hard stop has moved or drifted.

(c) **Max. Error Between Original (Calibrated) Physical Home and Current Physical Home.** Precision Homing will successfully complete as long as the Current Physical Home position does not exceed +/- 1/2 rev from Original Physical Home.

(d) **Final Position** after homing is complete (defined by the Physical Home Clearance, and Offset Move Distance parameters).

PRECISION HOMING SETUP

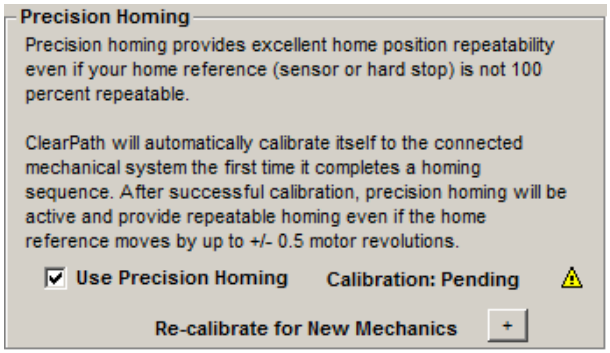

Precision Homing dialog in Homing Setup window

To calibrate ClearPath to your mechanics, you only need to complete one initial homing operation. Whenever you need to clear and reset calibration, click the (+) button as shown in the above screenshot and follow the prompts to clear the calibration.

Important: Any time a motor is connected to new or different mechanics, or is disassembled from its associated mechanics and reassembled, **you must clear the Precision Homing calibration data** to allow a new calibration to occur.

Manually clear the Precision Homing calibration data by doing one of the following:

- Press the “Clear Calibration…” button.
- Load a motor configuration file.
- Run Auto-tune.
- Reset the configuration to factory default settings. Once cleared, recalibration will occur on the very next homing operation.

MSP MOTION GENERATOR

The Motion Generator in MSP allows you to quickly and easily jog and test your ClearPath motors (and any connected mechanics) with **no external switches or sensors required.**

With the Motion Generator you can:

- Manually enable your ClearPath motor
- Run point-to-point profiled moves at the velocity, acceleration, and distance of your choosing
- Jog your motor at different velocities and accelerations
- Manually toggle all of your motor's digital inputs
- Visually monitor the status of the motor inputs and HLFB output

To open the Motion Generator mode from the MSP main menu, select *Mode>Motion Generator*.

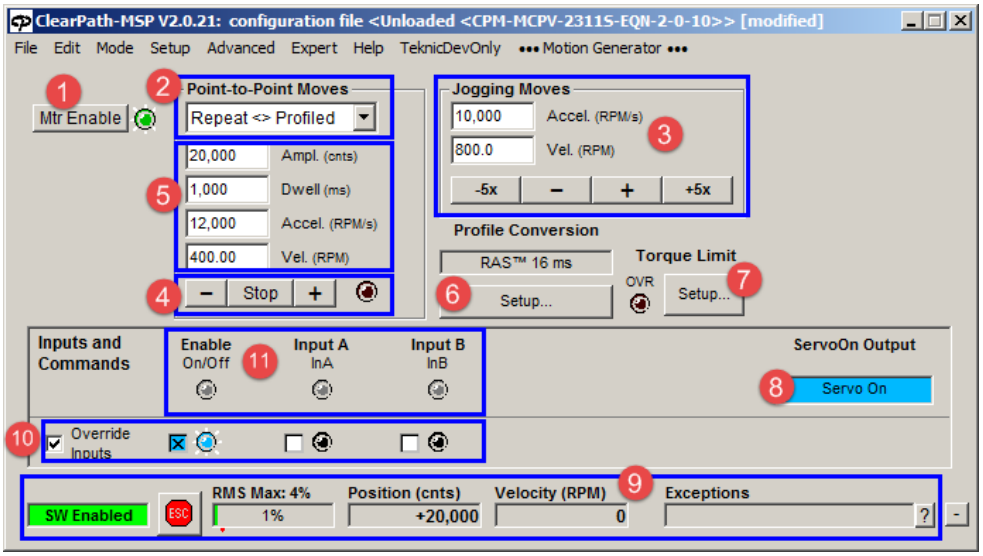

Motion Generator window

MOTION GENERATOR CONTROLS

1. Mtr Enable (Enable/Disable Button)

Use this button to enable and disable the motor. When ClearPath is enabled, the motor windings are energized and the motor is capable of responding to move commands.

2. Point-to-Point Move Type *(drop down menu)*

- **Single Profiled** - Move once and stop. Click + or - button to launch a single move in the specified direction.
- **Repeat <> Profiled** - Move back and forth repeatedly. Click + or - button to launch reciprocating (back and forth) moves. Moves will repeat indefinitely until the Stop button is clicked or an exception occurs.

- **Repeat >> Profiled** - Move repeatedly in the same direction. Click + or - button to launch repeating moves in the same direction. Moves will repeat indefinitely until the Stop button is clicked or an exception occurs.

3. Jog Controls - Jog your motor with a single click. Set acceleration and velocity as desired. Then, hold down (+) or (-) button to jog ClearPath; release to stop motion. Hold down the (+5x) or (-5x) button to jog ClearPath at 5 times the speed setting.

4. Move Start and Stop: Use these controls to start and stop a point-to-point move. The (+) button commands a move in the counterclockwise direction; the (-) button commands a move in the clockwise direction. Click the Stop button to end a move cycle. ***Double-click the Stop button to stop motion immediately.***

5. Move Parameters: Define move parameters for Point-to-Point Moves here. These include move distance (Ampl.), Velocity (Vel.) Acceleration (Accel.), and pause time between repeating moves in milliseconds (Dwell).

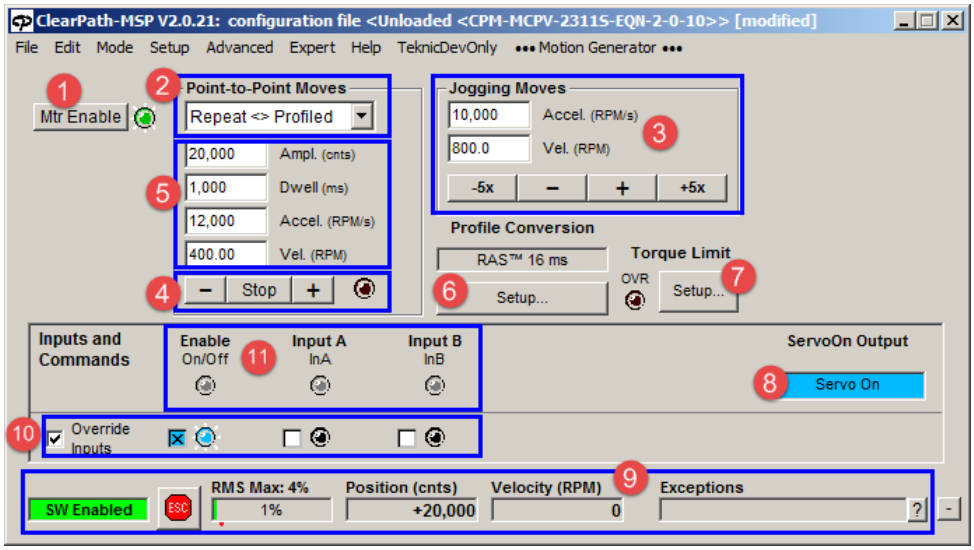

Motion Generator window (duplicate figure for reference)

6. RAS Setup: Opens the Profile Conversion dialog. Use this to set and test the effect of different RAS settings on your Motion Generator moves. Not all motors support all RAS options.

7. Torque Limit Setup: Opens Torque Limit dialog.

8. High Level Feedback Readout: Displays status of ClearPath's digital output, HLFB (High Level Feedback).

9. Dashboard: Displays real-time motor information including enable state, RMS torque level, motor position, motor velocity, and exception information.

10. Software Control Override: Check the "Override Inputs" button to activate Soft Controls. Manually toggle the motor's inputs without an external hardware controller.

11. Input Status: Software LEDs that visually indicate the logic states of the Enable Input, Input A, and Input B.

ENCODER AND INPUT RESOLUTION

INTRODUCTION

This section includes a discussion of the following topics:

- ClearPath's Internal (native) Encoder Resolution versus Positioning Resolution.
- Understanding and using the Input Resolution setting for *Step and Direction* and *Pulse Burst Positionin*g applications.

TERMS USED IN THIS SECTION

Count (or "encoder count")

A count is the smallest increment of encoder/shaft motion that can be commanded at a given encoder resolution. This family of ClearPath motors come in either 800 or 6400 counts per revolution. See *Positioning Resolution*, next page.

Step (also called "step pulse", or just "pulse")

A step is an electrical pulse sent from a controller, PLC, indexer, etc. to the ClearPath motor's step input as a means of commanding motion. One step pulse sent to the ClearPath Step Input tells ClearPath to rotate the shaft one increment of motion. If the step-to-count ratio is 1:1, then 1 step will command 1 count of motion.

Steps per count

This is just the number of step pulses required to move the motor shaft one count. This is often set at 1:1, but can be adjusted using the Input Resolution setting in MSP (covered later in this section).

Counts per step

This is the number of counts the motor shaft will move for each step sent to the ClearPath Step Input. This is often set at a 1:1 ratio, but can be adjusted using the Input Resolution setting in MSP (covered later in this section).

NATIVE RESOLUTION

ClearPath motors described in this manual are all equipped with an incremental rotary encoder with a native resolution of 12800 counts per revolution. This "internal" resolution is used by the motor's motion algorithms, and is one of the factors behind ClearPath's high precision, highly repeatable motion performance.

POSITIONING RESOLUTION

Positioning Resolution—also called *"Commandable Resolution"*—is the ClearPath motor's working encoder resolution. This is the encoder resolution you specified when ordering your ClearPath. The two available Positioning Resolution options for NEMA 17 ClearPath-SDs are:

- **800 counts per revolution** for motor part numbers ending in **-Rxx.**
- **6400 counts per revolution** for motor part numbers ending with **-Exx**.

INPUT RESOLUTION SETTING IN MSP

The **Input Resolution** setting lets you vary the ratio of step pulses received by the motor to encoder counts moved. It is set via a drop down menu in the mode settings of Step and Direction mode.

Feature Note: Enhanced ClearPath motors (part# ends in -Exx) allow the user to set the Input Resolution (steps per revolution) to **any whole number value greater than or equal to 200**.

INPUT RESOLUTION USE CASES

***Note:** The examples and screenshots below are based on an **800 count per revolution** ClearPath motor.*

- **Case #1. You want one step pulse to command one count of motion (default).** One count per step is the most common Input Resolution setting.

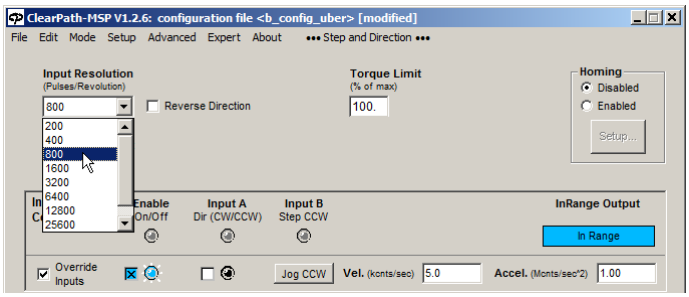

Using the above setting, 800 step pulses will make this [800 count] motor rotate one full revolution.

Tip: To set a 1:1 (1 step = 1 count) relationship, set the Input Resolution to the same value as your motor's Positioning Resolution. Example: For an 800 count per revolution motor (as in the figure above) set Input Resolution to 800 pulses per rev. For a 6400 count per rev motor, set it to 6400 pulses per revolution.

- **Case #2. You want one step pulse to command multiple counts of motion.** ClearPath can be configured such that a single step pulse commands 2, 4, 8, or more counts of motion. This strategy is most often used to compensate for a "slow"

controller, i.e., a controller that can't put out step pulses fast enough to meet the user's velocity requirements.

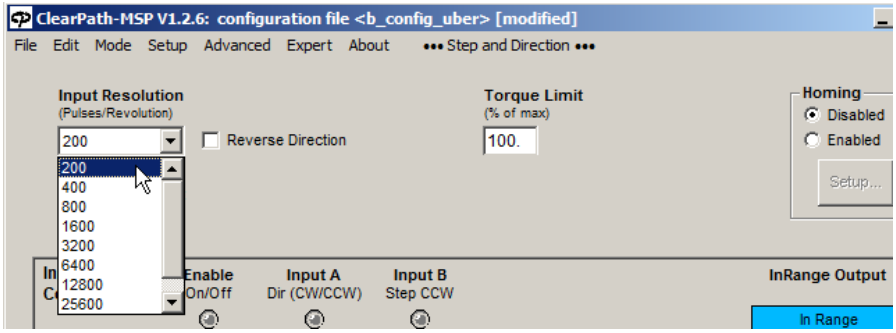

With the above Input Resolution setting, it takes only 200 step pulses to make this [800 count] motor rotate one full revolution.

- **Case #3. You need multiple step pulses to command *one* count of motion.** This use case is less typical, but can be convenient if you happen to be replacing a stepper motor with a ClearPath, but the two motors have different positioning resolutions.

  In the below example, by selecting 3200 step pulses per revolution, the controller must send 4 step pulses to command a single count of motion, 8 steps to command two counts of motion, and so forth.

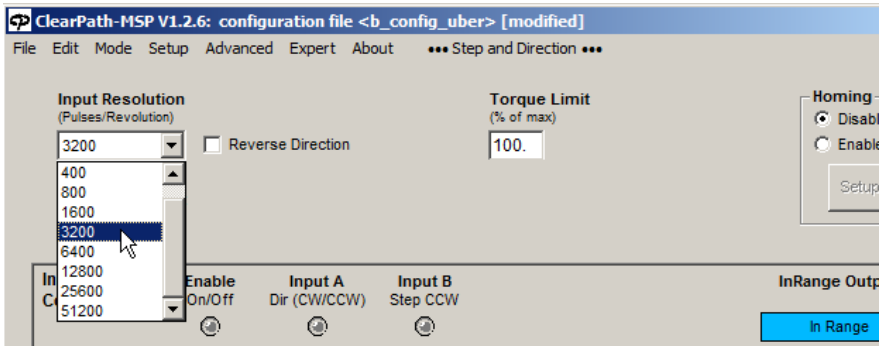

With the above Input Resolution setting, it takes 3200 step pulses to make this [800 count per rev.] motor rotate one full revolution.

RAS (VIBRATION AND RESONANCE SUPPRESSION)

RAS (**R**egressive **A**uto-**S**pline), one of Teknic's proprietary vibration and resonance suppression features, is designed to help produce smooth motion, reduce machine vibration, improve settling time, and decrease audible noise.

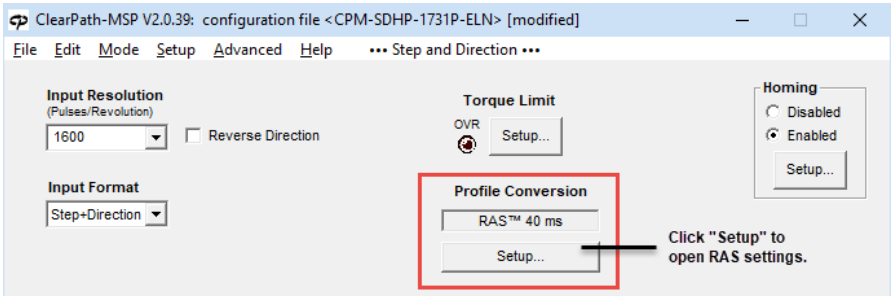

Location of RAS settings

RAS (REGRESSIVE AUTO-SPLINE)

RAS is a jerk limiting, and jerk-derivative limiting feature based on proprietary technology developed by Teknic.

The RAS software uses advanced algorithms to analyze each commanded move and rapidly calculate and "fit" a forth-order polynomial spline to it. This converts the sharp transitions between constant velocity and acceleration with more gradual, rounded corners.

Controlling the rate of change of acceleration in this manner results in moves that are lower in vibration, quieter, and easier on the machine's mechanical parts.

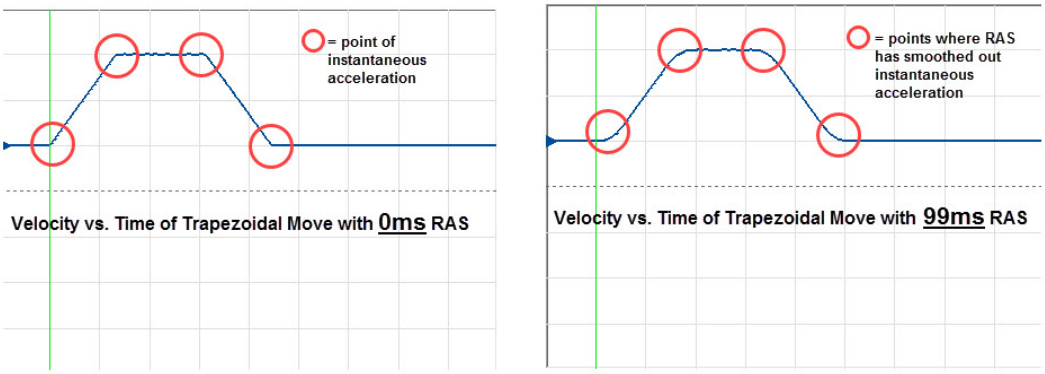

RAS Settings Comparison

Although RAS adds some time to the move (in the millisecond range), it can actually reduce overall move time by reducing settling time and/or allowing for the use of higher acceleration limits.

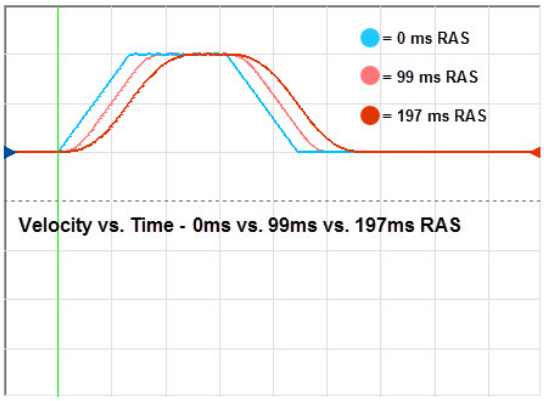

RAS Motion Profile Comparisons

SETTING RAS IN CLEARPATH-SD MOTORS

In SD ClearPath motors, you can manually select a single numerical RAS setting from the drop-down list as shown below.

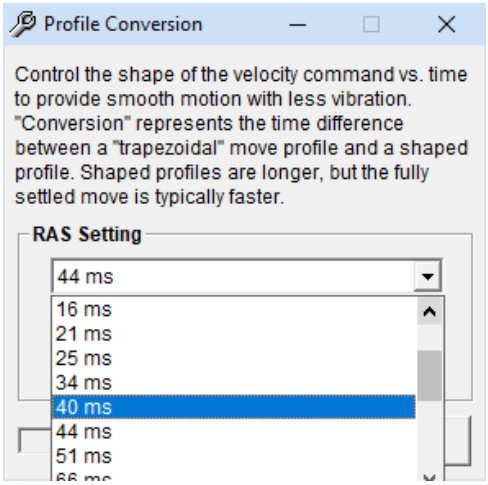

Additional Notes

- Manual RAS settings add a fixed conversion time to all moves. For example, a RAS setting of 25ms will add 25ms of conversion time to all moves issued while Manual RAS is in effect.
- ClearPath SD motors with part numbers ending in -Rxx have limited Manual RAS selections.

MAKE A "NO-CRIMP" LOGIC POWER SUPPLY CABLE FOR POWER4-HUB-S

This appendix applies to users who need a 2-pin cable to connect from their Logic Power Backup Supply to a POWER4-HUB-S.

Note 1: *12VDC or 24VDC supplies are most commonly, but the Logic Power Backup Supply can range anywhere from 12-75VDC.*

Note 2: *The logic supply's actual minimum power rating depends on the combined power draw of all devices connected to it.*

1. Select a Logic Backup Power Supply.
2. Order a Teknic CPM-CABLE-M2P2P-120. This is a 120" (10-ft.), 2-pin Molex to 2-pin Molex cable as shown below.

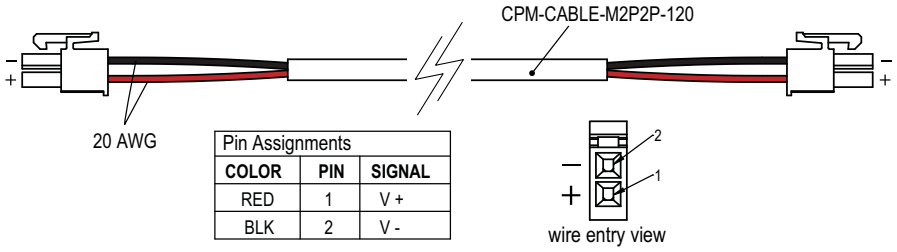

CPM-CABLE-M2P2P-120

3. Cut the cable to the desired length. If you cut it exactly in half, you can make two five foot cables.
4. Strip the outer jacket and conductors on the unterminated end of the cable to create flying leads.
5. Connect the flying leads to your logic power supply. Insulate any exposed conductors with heat shrinkable tubing, electrical tape or similar.

Test DC output polarity before connecting. Use a DMM to verify proper polarity at the DC output connector. Use the above diagram as a reference.

OTHER PRODUCT NOTES

CLEARPATH EMC INSTRUCTIONS

https://teknic.com/files/downloads/ClearPath EMC Instructions.pdf

Teknic, Incorporated
7650 Omnitech Pl
Victor, NY 14564

© 2026 Teknic, Inc. All rights reserved.