ClearPath® NEMA 17 Motor Control Cable

Molex Mini-Fit Jr. 8-Position to Molex Micro-Fit 3.0 8-Position, 10ft [3.05m]

PN: CPMT-CABLE-CTRL-YM120

All dimensions are in inches [mm] unless otherwise noted.
Sheet Scale 1:1 unless otherwise noted

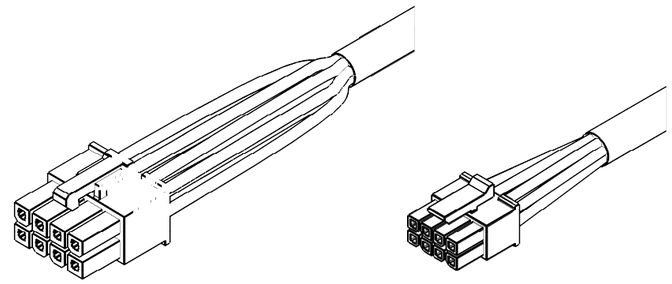

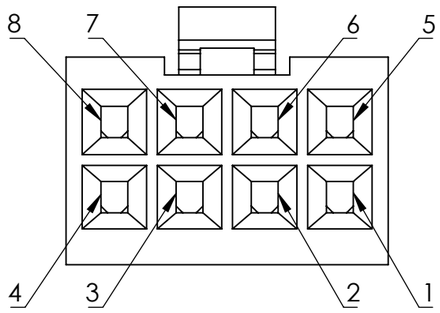

P1 Molex Mini-Fit Jr.
8-Position
Wire Entry View
Scale 3:1

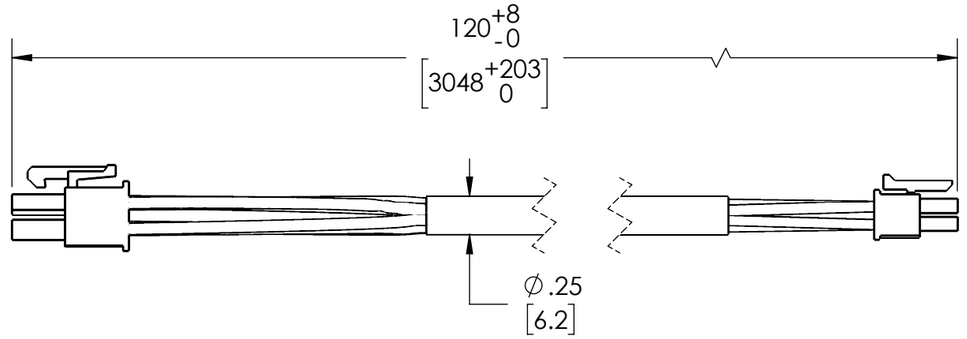

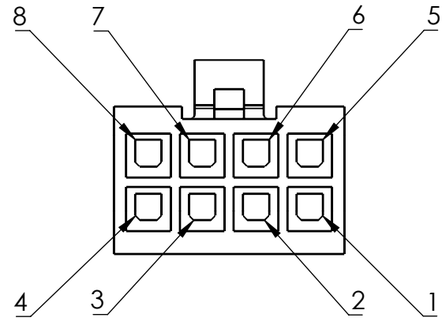

P2 Molex Micro-Fit 3.0
8-Position
Wire Entry View
Scale 3:1

Terminal Assignment Table

P1 Terminal	Wire Size	Color	MC/SD Signal	IP/SC Signal	P2 Terminal
1	24 AWG	Green	HLFB+	Data- (from motor)	1
2	24 AWG	Black	Input B+	Input B+	2
3	24 AWG	White	Input A+	Input A+	3
4	24 AWG	Blue	Enable+	Data+ (to motor)	4
5	24 AWG	Red	HLFB-	Data+ (from motor)	5
6	24 AWG	Yellow	Input B-	Input B-	6
7	24 AWG	Brown	Input A-	Input A-	7
8	24 AWG	Orange	Enable-	Data- (to motor)	8

Teknic, Incorporated
Victor, NY 14564 USA

This document and related electronic files are the sole property of Teknic, Incorporated and contain proprietary information.

Third-Angle Projection

Additional documentation including product specifications, up-to-date compliance information, and manuals can be downloaded from Teknic's website.
Visit https://www.teknic.com/ to access that documentation.

DWG. NO./REV D1297/A

TITLE: ClearPath® NEMA 17 Motor Cables