Teknic ClearPath®
Fractional HP, DC Input
NEMA 17

- All dimensions are in inch [mm] unless otherwise noted.
- Sheet Scale 1:1
- Undimensioned features are per 3D file for model of interest for reference use.
- Unless otherwise specified untoleranced dimensions are nonbasic and default to:
  X.XX: ± **.010" [0.25mm]**
  X.XXX: ± **.005" [0.125mm]**
  Angles: ± **1°**

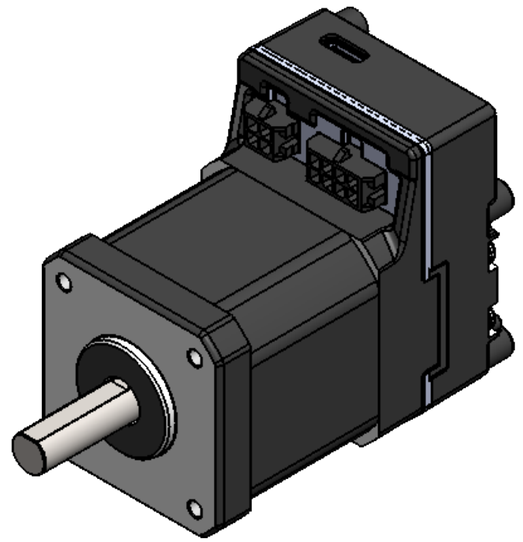

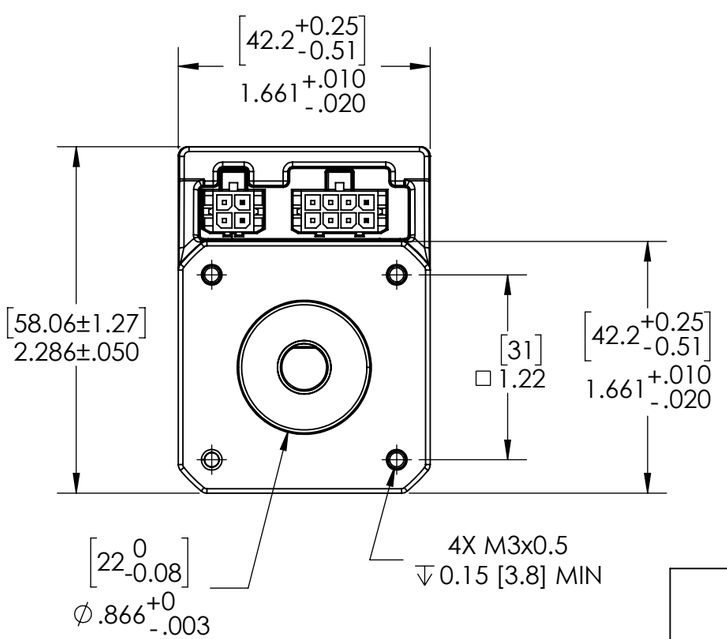

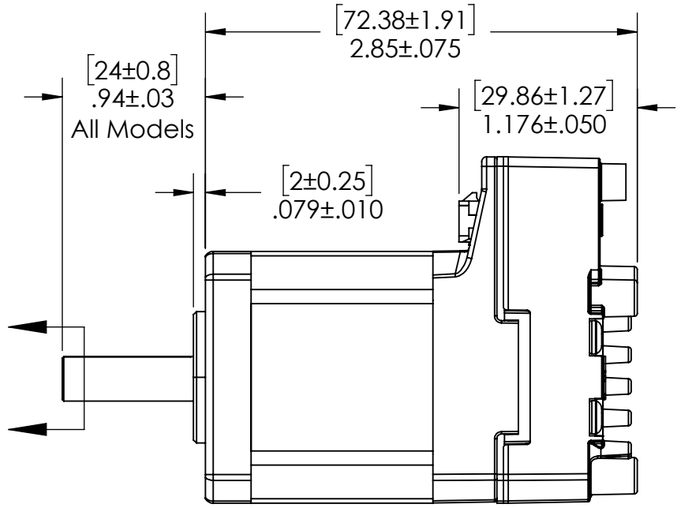

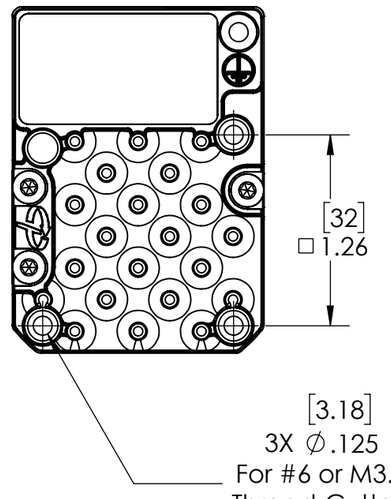

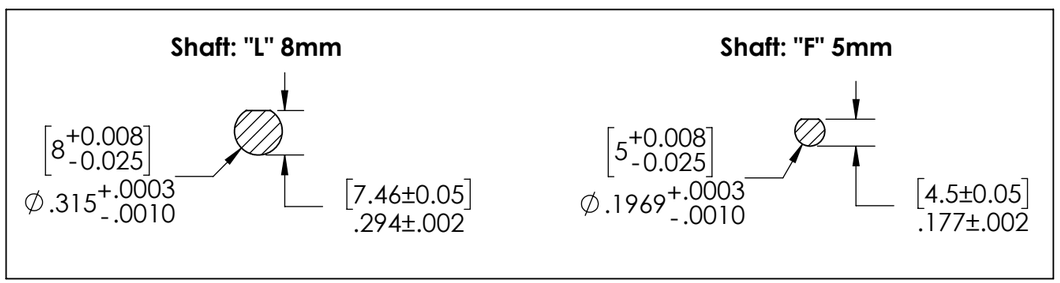

DWG. NO./REV D1292/B

TITLE: NEMA 17 ClearPath Motor Family

Teknic, Incorporated
Victor, NY 14564 USA

This document and related electronic files are the sole property of Teknic, Incorporated and contain proprietary information.

Third-Angle Projection

Additional documentation including product specifications, up-to-date compliance information, and manuals can be downloaded from Teknic's website.
Visit https://www.teknic.com/ to access that documentation.